Report on test in accordance with
OECD STANDARD CODE II for the Official
Testing of Agricultural Tractor Performance

Restricted Code

OECD No. **1661**

Agricultural Tractor
CASE IH MX120 - MAXXUM (4WD)
40 km/h-version, Power Shift
Model denomination MX120

Manufacturer

CASE United Kingdom Limited
Wheatley Hall Road
Doncaster DN2 4PG, England

Deutsche Landwirtschafts-Gesellschaft e.V. · Eschborner Landstraße 122 (DLG-Haus)
D-60489 Frankfurt a.M. · Telefon (069) 24 78 80
e-mail: FB-VI@DLG-Frankfurt.de · Telefax (069) 24 78 81 10

This is a report on a tractor test in accordance with OECD STANDARD CODE for the Official Testing of Agricultural Tractor Performance (C(87)53(Final), CODE II) and amendments (C(90)79, C(92)52, C(93)52 and C(93)133).

It does not contain an evaluation of the tractor on practical work.

Duration of tests: November 1996 till February 1997

DLG-Testing Station for Agricultural Machinery, Max-Eyth-Weg 1,
D-64823 Groß-Umstadt

This report has been approved by the OECD Co-Ordinating Centre (CEMAGREF, France) as being in accordance with the OECD STANDARD CODE.

Date of approval: 28th April 1997

OECD No. 1661
Restricted Code

In this report all performance characteristics are given corresponding to the International System of Units.

The reference to the former used Technical System of Units is given by the following relations:

Forces	1	kN	=	1000	N	=	102 kp
Powers				1	kW	=	1,36 PS
Pressures	1	MPa	=	10	bar	=	10,2 kp/cm^2
	100	kPa	=	1000	mbar	=	750,10 mm Hg

Printed in Germany, December 1997
DLG-No. 290

TABLE OF CONTENTS

Tractor manufacturer:	CASE United Kingdom Limited Doncaster DN2 4PG, England
Location of tractor assembly:	Doncaster DN2 4PG, England
Submitted for test by:	CASE Germany GmbH, D-41460 Neuss
Selected by:	Manufacturer with agreement by DLG
Place of running-in:	Doncaster and Groß-Umstadt
Duration of running-in:	Engine and tractor 57 hours

SPECIFICATION OF TRACTOR

Tractor

Make:	CASE IH
Trade name:	MX120 MAXXUM (4WD), 40 km/h version, Power Shift
Model denomination:	MX120
Type:	Wheel tractor, semi frame construction, four wheel driven
Serial no.:	JJE 095 0005
1st serial no.:	JJE 095 0001

Engine

Make:	CDC
Model:	6T-590
Type:	Watercooled 4 stroke Diesel-engine direct injection, supercharged,
Serial no.:	451 662 42
Cylinders:	6, in line, bore 102 mm, stroke 120 mm, displacement 5883 cm³; compression ratio 17.5 ± 1.5 : 1;
Valves:	Overhead

Supercharging

Make:	HOLSET
Model:	HX35
Type:	Exhaust driven supercharger, non wastegate without intercooler
Max. pressure:	104 ± 20 kPa

Fuel system:	FEDERAL-MOGUL fuel supply pump, BOSCH (optional MICO, Lic. BOSCH) inline "A" injection pump Type PN 3929 409 (CDC Part No.) serial no.: 566 423 10 manufacturer's production setting 67.0 ± 2 mm³/stroke at maximum power at 2000 rev/min, 62.0 ± 2 mm³/stroke at full load and rated speed; static injection timing device, 14° ± 1° crank angle before TDC; BOSCH multihole injection nozzles; injection pressure 24 + 1.0 MPa; replaceable fuel filter; capacity of fuel tank 263 dm³
Governor:	BOSCH mechanical RSV governor, with supercharge pressure compensating device, governed range of engine speed 925 ± 100 to 2420 +0/-50 rev/min, rated engine speed 2200 rev/min
Air cleaner:	DONALDSON, 141568A*, aspirated, Optional: 141567A*, non-aspirated; dry paper element filter with precleaner, safety element, replaceable cartridge; electric warning indicator lamp; air intake below bonnet, behind front grille
Exhaust silencer:	DONALDSON, 220159A*, aspirated, Optional DONALDSON or NELSON, 220158A* non-aspirated; multi-chamber expansion-type muffler 140 mm dia, 1790 mm long, located by RH "A" post; mouth showing forward to the right, top 2970 mm above ground
Lubrication system:	Pressure lubrication, internal gear pump, full flow oil filter with replaceable cartridge, engine oil/cooling-water heat exchanger in crankcase
Cooling system:	Water cooling with impeller pump, overpressure relief valve set to 103 + 7 kPa; thermostat and by-pass circuit; ECS / EATON 188922 A * viscous drive fan, belt driven, variable fan speed controlled by air flow temperature, 7 blades with 580 mm dia; water capacity 20 dm³

Starting system:	Electrical; NIPPONDENSO or BOSCH solenoid pre-engaged drive starter motor 3.1 kW; cold starting aid: Flame plug in air intake channel optionally: Ether injection to air intake manifold Safety device: Forward/neutral/reverse lever in neutral position Operator Presence Control
Electrical system:	12 Volt, negative earth; BOSCH 3-phase alternator K1-14 V/95A 1330 W; 2 lead acid batteries, 105 Ah, at 20 hours discharge period, each
<u>Transmission</u>	Universally jointed propeller shaft between engine and gear box
Clutch (travel alone):	CASE France wet multi-plate clutch, 127 mm dia, hydraulically operated by pedal or electro-hydraulically controlled by forward/neutral/reverse lever, integrated in gear box
Gear box:	CASE France, mechanical POWER SHIFT, 40 km/h version; power shift speed change gear with 4 speeds; range gear with 4 synchronized ranges (I, II, III, IV); 2 wet multi-plate clutches shift reversing gear (power shifted); range IV locked out in reverse operation; total number of gears: 16 forward, 12 reverse; 2 levers, 1 switch optionally available, not fitted: 1 synchronized creeper range (CR), acting on all range gears; provides total 32 forward and 24 reverse speeds
Rear axle and final drives:	CASE France, bevel gear drive; bevel gear differential with multiplate differential lock, electro-hydraulically engaged/disengaged by switch or automatically disengaged by service brake operation or engine cutoff; planetary final drives
Front axle and final drives:	CARRARO 20.19; driven by wet multi-plate clutch, propeller shaft (in tractor's median plane) and bevel gear; clutch operated by electro-hydraulic switch; limited slip differential; planetary final drives

CASE IH MX120 - MAXXUM (40 km/h), Power Shift **Test No. 96-251**

Total ratios and speeds:

Number of revolutions of front wheels for one revolution of rear wheels: 1.3199

Range	Gear	Number of engine revolutions for one revolution of the driving wheels	Nominal travelling speed *) at rated engine speed 2200 rev/min km/h
Forward speeds			
I	1	246.82	2.87
	2	204.93	3.46
	3	165.81	4.28
	4	133.85	5.30
II	1	108.29	6.55
	2	89.91	7.89
	3	72.75	9.75
	4	58.73	12.07
III	1	65.87	10.77
	2	54.69	12.97
	3	44.25	16.03
	4	35.72	19.85
IV	1	33.88	20.93
	2	28.12	25.22
	3	22.75	31.17
	4	18.37	38.61
Reverse speeds			
I	1	213.31	3.32
	2	177.11	4.00
	3	143.30	4.95
	4	115.68	6.13
II	1	93.61	7.58
	2	77.71	9.12
	3	62.88	11.28
	4	50.75	13.97
III	1	56.94	12.45
	2	47.27	15.00
	3	38.25	18.54
	4	30.87	22.97

*) calculated with the radius index (ISO 4251/1-1992) 855 mm

Main p.t.o.:

Independent;
driven by wet multi-plate clutch;
electro-hydraulically operated, electronically controlled by lever;
1 reversible shaft at tractor's rear
2 speeds selectable by hand lever
35 mm dia, 6 splines, ISO 500-1991 type 1
35 mm dia, 21 splines, ISO 500-1991 type 2

754 mm above ground, 500 mm behind rear wheel centre;
direction of rotation clockwise, seen in direction of travel

p.t.o. type	p.t.o. speed rev/min	engine speed rev/min	p.t.o. transmission ratio	power restriction kW
1000	1000 996	2209 2200	2.2095	-
540	540 634	1875 2200	3.4720	-

Secondary p.t.o.

Front p.t.o., independent
driven by wet multi-plate clutch and gear box from front end of engine crankshaft,
electro-hydraulically operated by switch
1 speed (1000 rev/min),
1 shaft 35 mm dia, 6 splines, ISO 500-1991 type 1

840 mm above ground, 715 mm in front of front wheel centre,
direction of rotation clockwise, seen in direction of travel

p.t.o. type	p.t.o. speed rev/min	engine speed rev/min	p.t.o. transmission ratio	power restriction kW
1000	1000 1100	2000 2200	2.000	-

Power lift	CASE; electro-hydraulic power lift, unit construction, draft, position- and intermixable control, floating position, fast raising, lowering throttle, lower links' sensing
Hydraulic system:	Closed, load sensing, pressure and flow compensated system; VICKERS variable displacement axial-piston pump, driven by gearbox, max. delivery 109 dm³/min at rated engine speed, oil cooler in front of engine coolant radiator, oil filter in feed line; VICKERS control valve, relief valve pressure setting 20.2 ± 0.4 MPa; single acting cylinder with 105 mm bore and 227 mm stroke, safety valve set to 23.5 ± 0.7 MPa; 3 double acting additional CASE control valves, one valve used for front power lift, 4 oil couplings at rear of tractor; maximum volume of oil, available to external cylinders : stationary tractor operating on slopes of no more than 2 degrees 30 dm³, moving tractor operating on slopes of no more than 15 degrees 20 dm³, of no more than 30 degrees 12 dm³; hydraulic oil reservoir in common with gear box with 76 dm³ capacity (88 dm³ capacity with increased oil level) the hydraulic oil pump further provides hydraulic pressure for actuating of steering, p.t.o clutch, power-shift gear, rear axle differential lock and for shifting the front axle drive clutch

Three-point linkage: Category 2 acc. to ISO 730/1-1994, lower links with WALTERSCHEID quick couplers

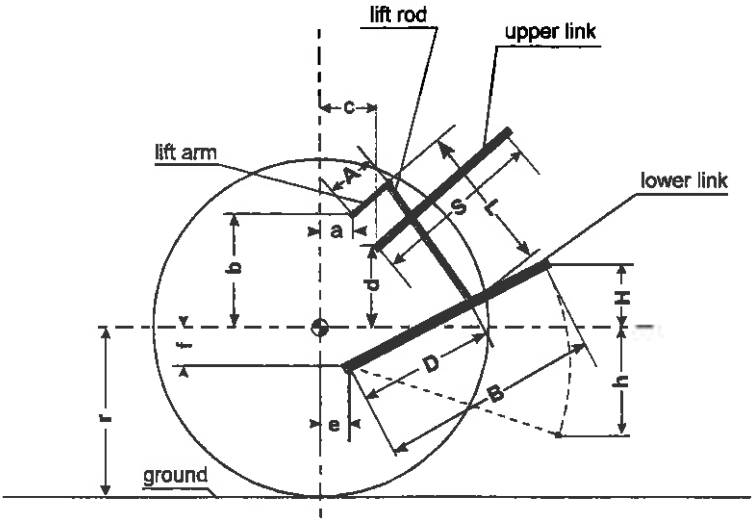

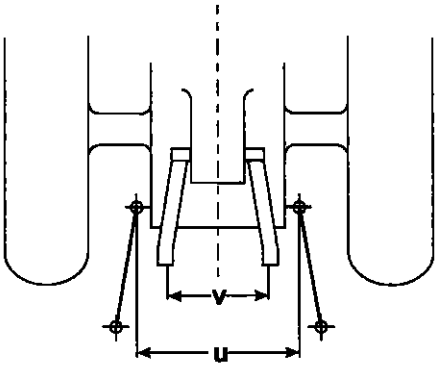

CASE IH MX120 - MAXXUM (40 km/h), Power Shift **Test No. 96-251**

Dimensions of rear implement linkage			projected lengths in mm	
			dimensions (general)	dimensions used for test
Rear tyres 20.8 R 38 radius index		(r)*	855	
Front tyres 16.9 R 28 radius index		(r')*	670	
Length of lift arms		(A)	230	
Length of lower links		(B)	891	
Distance of lift arm pivot points from rear axle centre	horizontal vertical	(a) (b)	249 173	
Horizontal distance between lower link pivot points		(u)	543	
Horizontal distance between lift arm end points		(v)	692	
Length of upper link		(S)	610-880	760
Distance of upper link pivot point from rear wheel axis	horizontal vertical	(c) (d)	342,366 284,219	366 219
Distance of lower link pivot point from rear wheel axis	horizontal vertical	(e) (f)	223 253	
Distance of lower link pivot point from lift rod pivot points on lower links		(D)	554	
Length of lift rods		(L)	525-642	642

Height of lower link hitch points relative to rear wheels' centre line (situated 855 mm above ground), these data are valid for unloaded power lift:

Length of lift rods	(L)	525	642
Linkage distance of lift rods	(D)	554	
Lowest position	(h)	378	655
Highest position	(H)	200	100
Transport position	(H')	200	100

*) Assuming r resp. r' = tyre dynamic radius index of ISO 4251/1-1992

Front power lift:

Three point linkage — Category 2 acc to ISO 730/I - 1994, lower links with WALTERSCHEID quick couplers

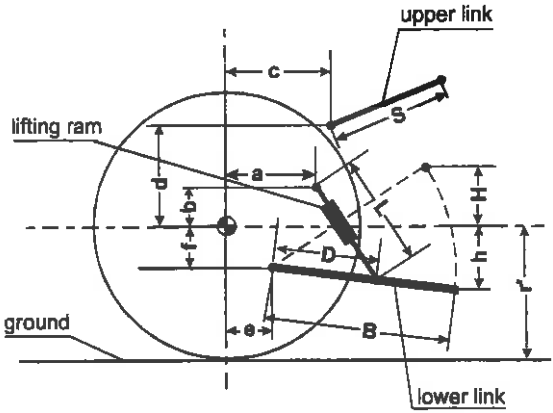

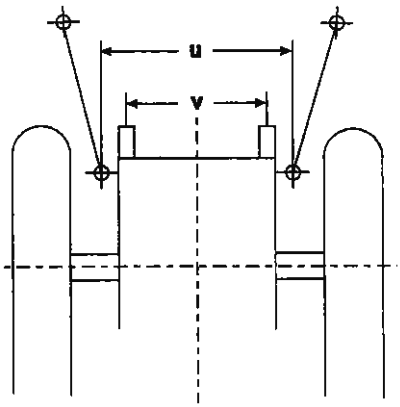

Dimensions of front implement linkage			projected lengths in mm	
			dimensions (general)	dimensions used for test
Rear tyres, 20.8 R 38, radius index		(r)*)	855	
Front tyres, 16.9 R 28, radius index		(r')*)	670	
Length of lower links		(B)	710	
Distance of lifting ram pivot point from front wheel axis	horizontal	(a)	440	
	vertical	(b)	326	
Distance of upper link pivot point from front wheel axis	horizontal	(c)	750, 725	750
	vertical	(d)	505	
Distance of lower link pivot point from front wheel axis	horizontal	(e)	600	
	vertical	(f)	85	
Horizontal distance between lower link pivot points		(u)	621	
Horizontal distance between lifting ram pivot points		(v)	380	
Distance of lower link pivot point from lifting ram fixing point on lower link		(D)	200	
Length of lifting ram	min./max.	(L)	335 - 535	
Length of upper link	min./max.	(S)	490 - 650	565
Diameter of lifting ram			63	

Height of lower link hitch points relative to front wheel axis (situated 670 mm above ground), these data are valid for unloaded power lift

Lowest position	(h)	450
Highest position	(H)	260
Transport position	(H')	260

*) Assuming r resp. r'= tyre dynamic radius index of ISO 4251/1-1992

Pull equipment

Swinging drawbar:	not fitted to tested tractor	
	Longitudinally adjustable	
	height above ground	433 mm
	distance of hitch point	
	from rear wheel axis, horizontally	895, 945, 1045, 1145 mm
	from p.t.o. shaft end	
	vertically	321 mm
	horizontally	395, 445, 545, 645 mm
	pin hole swingable to both sides of centre line (6° or 11°)	
	with drawbar fully pushed in	101/184 mm
	with drawbar fully drawn out	127/218 mm
	distance of pivot point from rear wheel axis horizontally (before axis)	73 mm
	diameter of drawbar pin hole	33 mm
	maximum vertical permissible load (drawbar fully pushed in)	18 kN
Trailer hitch:	CRAMER, KU 64002 A, automatic	
	diameter of hitch pin	32 mm
	height above ground adjustable by one hand	
	quick adjustment to	803, 852, 901, 950, 999 mm
	distance of hitch point from rear wheel axis, horizontally	688 mm
	from p.t.o. shaft end, horizontally	188 mm
	vertically	49, 98, 147, 196, 245 mm
	maximum vertical permissible load	20 kN

Hitch hook:	fitted to tested tractor DROMONE Eng. Ltd, Type A 3200 hydraulically operated, hook interchangeable with drawbar, distance of hitch point from rear wheel axis,	horizontally	560, pushed out 825 mm
	from p.t.o. shaft end	vertically	240 mm
		horizontally	60, pushed out 325 mm
	maximum vertical permissible load		30 kN
Holed drawbar:	short bar, length between ball guides		820 mm
	9 holes with 33 mm diameter with 80 mm distance each		
	thickness		30 mm
	height above ground:	maximum	1055 mm
		minimum	200 mm
	horizontal distance to p.t.o. shaft end (with lower links horizontal)		614 mm
Towing hitch:	At front, height of mouth's centre above ground		1020 mm

Steering

DANFOSS, Dual displacement, OSPD 60/185 LS; or
EATON, 263-4325-002
hydrostatic front wheel steering, connected by sequence valve to the hydraulic system of the tractor (see on page 9);
1 integrated WEBER ram (symmetrical design),
240 mm stroke, 72 mm bore and 38 mm dia of piston rod, directly acting on steering levers,
working pressure 18.3 ± 0.35 MPa

Brakes

Service brake:	CASE pedal operated muscle power brake with hydraulic transmission, using oil of gearbox, acting on rear wheels; front axle drive is engaged automatically during braking; oil-immersed disc brake with 1 ring-piston on each differential half shaft; disc diameter 300 mm optionally available: power assisted brakes
Trailer brake	Compressed air braking system, one line and two line system couplings at rear of tractor WABCO compressor , belt driven by engine crankshaft
Parking brake:	Mechanical wet disc brake, operated by lever with ratchet; 2 lining discs with 143 mm dia each, situated on drive shaft of rear axle (in front of bevel-gear pair)
Steering brake:	Divided pedal of service brake, for normal use locked together

Wheels

Front:	Steering and driving, 2 pneumatics
Rear:	Driving, 2 pneumatics
Wheelbase:	2700 mm
Track width:	At front adjustable from 1530 mm up to 1930 mm in steps of 100 mm each by adjustable gauge bowl wheels and by turning the wheels
	At rear adjustable from 1530 mm up to 1930 mm in steps of 100 mm each by adjustable gauge bowl wheels and by turning the wheels

Possible combinations of tyre sizes

Tyre sizes	
Front	Rear
13.6 R 28	16.9 R 38 or 480/70 R 38
420/70 R 28	18.4 R 38 or 520/70 R 38
380/70 R 28	16.9 R 38 or 480/70 R 38
14.9 R 28	18.4 R 38 or 480/70 R 38
16.9 R 28	20.8 R 38
480/70 R 28	20.8 R 38 580/70 R 38

Protective structure

CASE, cab model CASE IH MX30 - EURO-version, 2-door, OECD-tested driver's platform with integrated safety frame, OECD approval no. CSS 0387/323
not tiltable, antivibration mounted by silent-blocks on tractor; 2 doors with 3 steps each, steps 532, 804 mm and 1076 mm; driver's platform 1315 mm above ground; windscreen, rear window and rear side windows tiltable; roof hatch, air conditioner (not fitted to tested tractor) and combined heating/ventilation system with 3-step blower and cooling-water heat exchanger incorporated in roof; air intake around side and front roof perimeter, dry air filter; air outlet jets in the roof at front, recirculating louver at rear,
defroster nozzles in the roof at front

Noise reduction materials:

Roof, Headliner:	Fabric, acoustical-foam	5 - 75 mm
	resin impregnated 50/50 cotton felt /fiberglass (moulded part)	10 - 25 mm
	acoustical-foam	70 mm
Roof, front part:	ABS-panel part	3 mm
Floor:	Mat, consisting of:	
	compression moulded rubber	30 mm
Seat support, on the surface and the front side:	Mat, consisting of:	
	compression moulded rubber	30 mm
Console panels:	Compound mat, consisting of:	
	perforated vinyl and foam	12 mm
	ABS backing	3 mm
	foam at the cab floor	25 mm
Rear panel:	None	
Mudguards:	Compound mat, consisting of:	
	perforated vinyl and foam	6 mm
	perforated ABS backing	3 mm
	acoustical-foam	25 mm
B-posts:	ABS-panel part	3 mm
Bulk head:	Compound mat, consisting of:	
	foam	12 mm
	compression moulded rubber	8 mm
	foam with alu foil	25 mm
Draught proofing:	Rubber seals and Silicon	

Driver's seat

GRAMMER, MSG 95 A/31
upholstered seat with back rest and arm rests, pneumatic suspension with automatic weight adjustment, hydraulic shock absorber; height of unloaded seat above seat platform steplessly adjustable from 410 to 530 mm, longitudinal adjustment 215 mm

Operating hours meter: Electronic, counts real operating hours when engine is running

Lighting: Electrical, 12 Volt,

	Height above ground of centre mm	Size mm	Distance from outside edge of lights to median plane of tractor mm
Headlights	1400	160x80	230
Headlights, 2nd pair	2720	140x75	740
Auxiliary lights	2770	130x75	450
Rearlights	1820	60x50	840
Reflectors	840	100x50	600

TEST CONDITIONS

Overall dimensions

Length without / with front power lift mm	Width mm	Height at top of protective structure mm	Height at top of exhaust silencer pipe mm
4675 / 5205	2360	2970	2970

Ground clearance: 390 mm underneath hitch hook

Tractor mass (with cab)

	Without driver kg	With driver kg
Front	2720	2735
Rear	3545	3605
Total	6265	6340

Tyres and track widths specifications

	Front	Rear
Tyres:	GOODYEAR	GOODYEAR
Dimensions	16.9 R 28	20.8 R 38
ply rating/load index speed index	- / 136 A8	- / 153 A8
type	radial-ply	radial-ply
maximum load (tyre manufacturer's) 40 km/h	2240 kg	3650 kg
inflation pressure (tyre manufacturer's)	160 kPa	160 kPa
radius index	670 mm	855 mm
Chosen track width	1830 mm	1830 mm
Rims	DW15x28	DW 18Lx38
Technically permissible axle load	4500 kg	6600 kg
Technically permissible total weight	9000 kg	

Oils and lubrication

Capacity and change interval:

	Capacity dm³	Oil change h	Filter-change h
Engine	15.0	250, 300 with CASE IH oil and filter	
Gearbox, hydraulic system, rear axle and final drives	76.0	1200	1200
Front axle (differential)	6.0		-
Final drives (front)	2 x 0.6		

Specification:

	Recommended	Used during test
Engine oil used in: Engine Type Viscosity Winter Summer Tropics Classification	 Engine oil SAE 10W/30 SAE 15W/40 or 10W/30 SAE 15W/40 API-CE	 CASE-IH engine oil no.1 SAE 15W/40 API-CE
Transmission oil used in: Gearbox with rear axle incl. final drives, hydraulic system, steering, brake system Type Viscosity Classification Front axle incl. final drives Type Viscosity Classification	 CASE IH HYTRAN-PLUS ISO-VG-46 MS 1223 *) Gear oil SAE 85W/140 MS 1316 *)	 CASE IH HYTRAN-PLUS ISO-VG-46 MS 1223 *) Gear oil SAE 85W/140 MS 1316 *)

*) MS = CASE material specification

Grease: Multi purpose grease
number of lubrication points: 10
+4 at front power lift +2 at hitch hook

Fuel:

Used during test:

Type: ARAL Diesel fuel, in conformity with DIN 51601

Density at 15° C: at p.t.o. performance tests 0,825 g/cm³

at drawbar power tests 0,825 g/cm³

According to tractor manufacturer also permitted:

Rape seed oil fuel (methyl ester RME)

COMPULSORY TESTS

1. MAIN POWER TAKE OFF PERFORMANCE (1000 rev/min)

Date of tests: 5th November 1996
Location of tests: DLG-Testing Station Groß-Umstadt
Type of dynamometer: SCHENCK hydraulic dynamometer U1-40

Power kW	Speed Engine rev/min	Speed P.t.o. rev/min	Fuel consumption hourly dm³/h	Fuel consumption hourly kg/h	Fuel consumption specific g/kWh	Specific energy kWh/dm³
Maximum power						
1.1 At 2-hour test						
83.9	1900	860	24.03	19.85	237	3.49
1.2 At rated speed						
78.7	2200	996	24.62	20.34	258	3.20
1.3 At standard p.t.o. speed						
78.7	2200	996	24.62	20.34	258	3.20
1. 4 Part loads, the governor hand lever in the position corresponding to maximum power at full load (curve a)						
1.4.1 the torque corresponding to maximum power at rated speed						
78.7	2200	996	24.62	20.34	258	3.20
1.4.2 85% of the torque obtained in 1.4.1						
68.5	2255	1021	22.30	18.42	268	3.07
1.4.3 75% of the torque defined in 1.4.2						
52.0	2284	1034	18.61	15.37	295	2.79
1.4.4 50% of the torque defined in 1.4.2						
35.2	2317	1049	14.64	12.09	343	2.40
1.4.5 25% of the torque defined in 1.4.2						
17.8	2346	1062	10.90	9.00	503	1.63
1.4.6 unloaded						
-	2373	1074	7.09	5.86	-	-

Power kW	Speed Engine rev/min	Speed P.t.o. rev/min	Fuel consumption hourly dm³/h	Fuel consumption hourly kg/h	Fuel consumption specific g/kWh	Specific energy kWh/dm³

1. 5 Part loads, the governor hand lever in the position corresponding to standard p.t.o. speed at full load (curve b)

1.5.1 the torque corresponding to maximum power

78.7	2200	996	24.62	20.34	258	3.20

1..2 85% of the torque obtained in 1.5.1

68.5	2255	1021	22.30	18.42	268	3.07

1.5.3 75% of the torque defined in 1.5.2

52.0	2284	1034	18.61	15.37	295	2.79

1.5.4 50% of the torque defined in 1.5.2

35.2	2317	1049	14.64	12.09	343	2.40

1.5.5 25% of the torque defined in 1.5.2

17.8	2346	1062	10.90	9.00	503	1.63

1.5.6 unloaded

-	2373	1074	7.09	5.86	-	-

No load maximum engine speed:	2373 rev/min
Equivalent flywheel torque at rated engine speed:	341 Nm
Equivalent flywheel torque at 2-hour test:	422 Nm
at engine speed:	1900 rev/min
Maximum equivalent flywheel torque:	493 Nm
at engine speed:	1204 rev/min

Mean atmospheric conditions

temperature:	21 °C
pressure:	98.8 kPa
relative humidity:	30 %

Maximum temperatures

coolant:	88 °C
oil:	106 °C
fuel:	54 °C
air intake:	23 °C

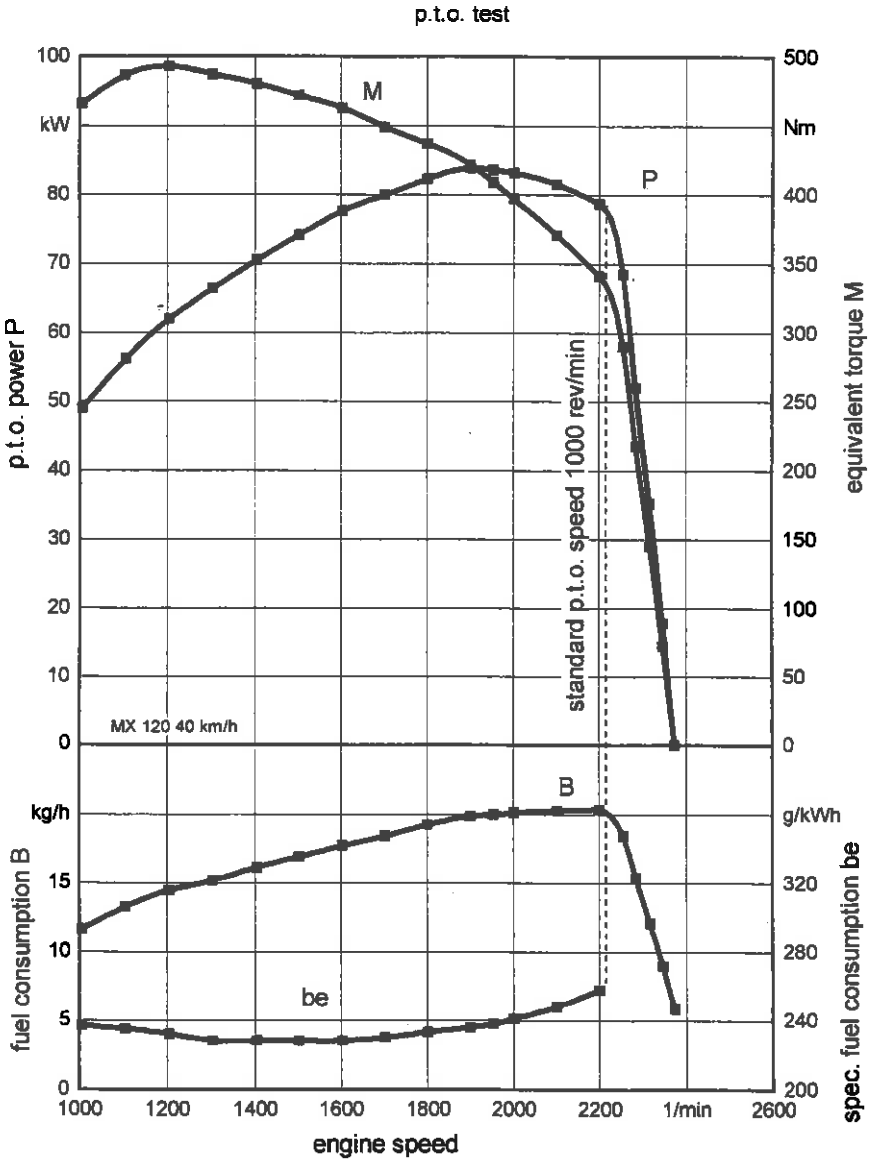
p.t.o. test
M
P
B
be
kW
Nm
kg/h
g/kWh
p.t.o. power P
equivalent torque M
fuel consumption B
spec. fuel consumption be
standard p.t.o. speed 1000 rev/min
MX 120 40 km/h
engine speed
1/min
100
80
70
60
50
40
30
20
10
0
500
400
350
300
250
200
150
100
50
0
15
5
320
280
240
1000
1200
1400
1600
1800
2000
2200
2600

CASE IH MX120 - MAXXUM (40 km/h), Power Shift **Test No. 96-251**

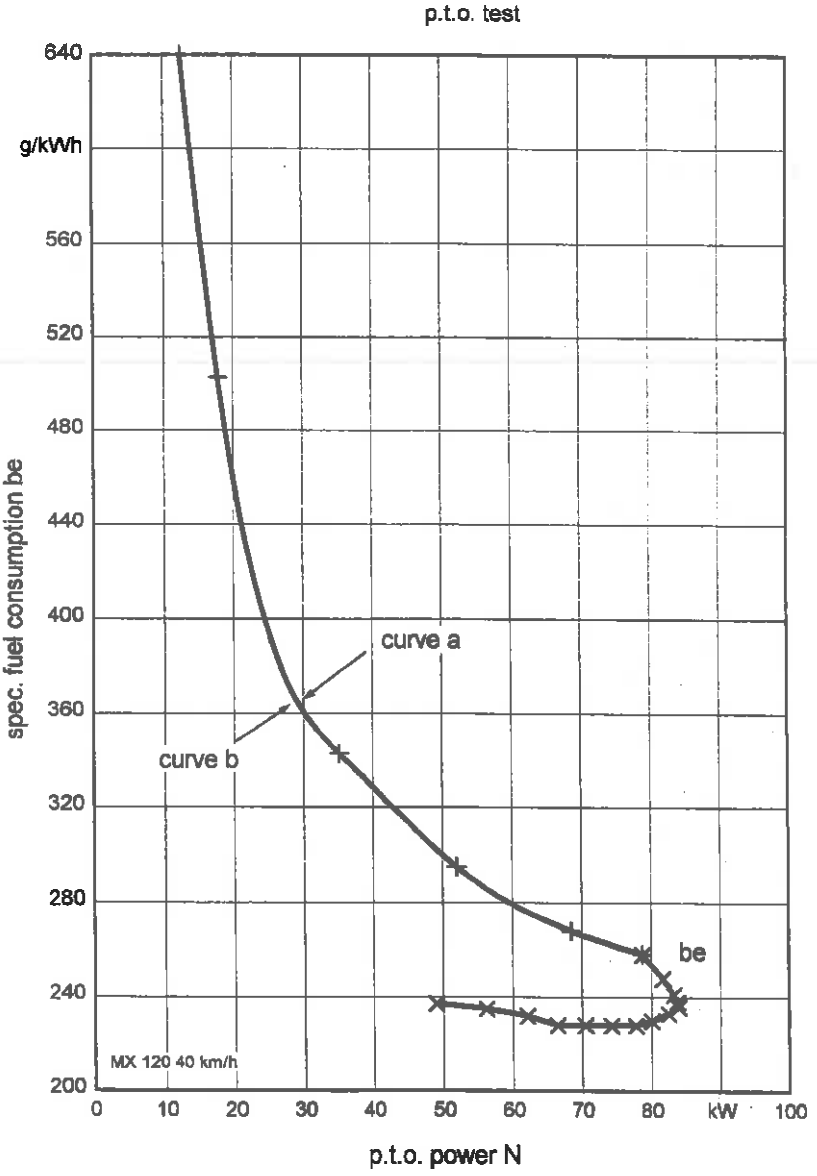

2 HYDRAULIC POWER AND LIFTING FORCE

Date of tests: 6th February 1997

2.1 Hydraulic power test

Sustained pressure with relief valve open 19.6 MPa

Pump delivery rate at minimum pressure 98.6 dm³/min

	Hydraulic power kW	Flow rate dm³/min	Pressure MPa	Oil Temperature ° C
At 90% of the actual relief valve setting	15.3	52.0	17.6	65
Maximum	21.7	86.8	15.0	65

Tapping point used for test: at rear of tractor, connected with additional control valve no.1, using control valves no 1 and no. 2 as return line.

2.2 Power lift test. Maximum pressure in the lift cylinder 20.5 MPa

	At the hitch points	On the frame
Height of lower hitch points above ground in down position	200 mm	
Vertical movement without lifting forces with lifting forces	755 mm 730 mm	865 mm 835 mm
Max. corrected force exerted through full range	44.7 kN	35.25 kN
Corresponding pressure	18.5 MPa	
Moment about rear axle		62.1 kNm
Max. tilt angle of mast from vertical		7°

Lifting heights relative to horizontal lower links												
mm	-465	-400	-300	-200	-100	0	+100	+200	+300	+330	+370	
Lifting forces at hitch points, corrected to 18.5 MPa												
kN		44.7	48.8	51.25	51.00	50.00	48.80	47.15	45.50	45.50		
Lifting forces at standard frame, corrected to 18.5 MPa												
kN	40.6	42.85	44.70	44.70	43.65	41.80	39.80	38.15	36.50		35.25	

2.3 Front power lift test. Maximum pressure in the lift cylinder 19.6 MPa

	At the hitch points	On the frame
Height of lower hitch points above ground in down position	200 mm	
Vertical movement without lifting forces with lifting forces	710 mm 695 mm	745 mm 720 mm
Max. corrected force exerted through full range	27.70 kN	21.25 kN
Corresponding pressure	17.6 MPa	
Moment about front axle		40.80 kNm
Max. tilt angle of mast from vertical		4°

Lifting heights relative to horizontal lower links												
mm	-370	-360	-300	-200	-100	0	+100	+200	+300	+325	+360	
Lifting forces at hitch points, corrected to 17.6 MPa												
kN	32.20		31.05	30.15	29.50	29.25	29.05	28.35	27.70	27.70		
Lifting forces at standard frame, corrected to 17.6 MPa												
kN		34.75	31.95	29.70	28.15	26.80	25.55	24.20	22.50		21.25	

3 DRAWBAR POWER AND FUEL CONSUMPTION

Date of test: 12th December 1996 till 22nd January 1997
Type of track: Concrete

Gear and range	Speed km/h	Drawbar pull kN	Power kW	Engine speed rev/min	Slip of wheels %
3.1 MAXIMUM POWER IN TESTED GEARS					
I 2	3.11	66.48	57.4	2244	11.9
I 3	3.56	66.31	65.5	2092	12.3
I 4	4.29	58.03	69.2	1903	6.5
II 1	5.47	46.99	71.4	1906	3.4
II 2	6.66	38.03	70.4	1909	2.4
II 3	8.27	30.42	69.8	1904	1.9
III 1	9.09	27.71	70.0	1889	2.0
II 4	10.26	24.59	70.1	1904	1.7
III 2	11.04	22.82	70.0	1904	1.7
III 3	13.71	17.90	68.2	1895	1.3
3.2 FUEL CONSUMPTION					
3.2.1 gear with max. drawbar power (at rated speed)					
II 1	6.44	37.35	66.8	2198	2.1
3.2.1.1 75 % of pull at maximum power at rated speed					
II 1	6.65	28.27	52.2	2270	1.4
3.2.1.2 50 % of pull at maximum power at rated speed					
II 1	6.79	18.71	35.3	2305	0.9
3.2.1.3 next higher gear at reduced engine speed; same pull and travelling speed					
II 2	6.71	28.00	52.2	1902	1.6
3.2.1.4 next higher gear at reduced engine speed; same pull and travelling speed					
II 2	6.85	18.61	35.4	1927	1.0
3.2.2 in selected gear, nearest to 7.5 km/h at rated speed					
II 2	7.71	31.02	66.4	2199	2.4
3.2.2.1 75 % of pull at maximum power at rated speed					
II 2	8.03	23.37	52.1	2273	1.8
3.2.2.2 50 % of pull at maximum power at rated speed					
II 2	8.20	15.29	34.8	2306	1.1
3.2.2.3 next higher gear at reduced engine speed; same pull and travelling speed					
II 3	8.00	23.32	51.8	1829	1.5
3.2.2.4 next higher gear at reduced engine speed; same pull and travelling speed					
II 3	8.15	15.51	35.1	1862	1.1

Height of drawbar above ground	Tyre inflation pressure Front	Tyre inflation pressure Rear
590 mm	80 kPa	80 kPa

Specific fuel consumption g/kWh	Specific energy kWh/dm³	Temperatures Fuel °C	Temperatures Coolant °C	Temperatures Engine oil °C	Atmospheric conditions Tempe-rature °C	Atmospheric conditions Relative humidity %	Atmospheric conditions Pressure kPa
347	2.38	58	85	95	8	90	100.7
311	2.64	58	85	97	8	90	100.7
286	2.88	53	84	96	7	90	100.7
279	2.96	55	85	95	5	90	100.7
282	2.94	55	86	98	4	80	99.3
285	2.90	56	86	98	3	80	99.3
282	2.93	53	85	97	7	80	99.3
283	2.92	57	86	98	8	80	99.3
283	2.92	54	86	97	5	80	99.3
292	2.83	56	86	99	6	80	99.3
304	2.71	56	86	98	8	90	100.7
327	2.52	58	84	96	9	90	100.7
387	2.13	58	83	95	9	90	100.7
as in 3.2.1.1							
291	2.84	54	82	93	7	90	100.7
as in 3.2.1.2							
329	2.51	54	82	93	6	90	100.7
307	2.69	58	86	100	10	80	99.3
333	2.48	60	86	99	5	80	99.3
392	2.10	59	83	96	7	80	99.3
as in 3.2.2.1							
287	2.87	55	84	95	7	80	99.3
as in 3.2.2.2							
330	2.50	56	82	93	7	80	99.3

4 REPAIRS AND REMARKS

The drawbar pull and wheel slip in I 2 and I 3 gears were limited to avoid excessive tractor bouncing.

Published
with the support of the Federal Ministry for Food, Agriculture and Forestry

Deutsche Landwirtschafts-Gesellschaft e.V. (DLG)
Fachbereich Landtechnik – Prüfungsabteilung –
Eschborner Landstraße 122 (DLG-Haus)
D-60489 Frankfurt am Main