OECD APPROVAL # 1614
(Restricted code)
Date of approval: 7 May, 1996

NEBRASKA TRACTOR TESTING LABORATORY
DEPARTMENT OF BIOLOGICAL SYSTEMS ENGINEERING
INSTITUTE OF AGRICULTURE AND NATURAL RESOURCES
UNIVERSITY OF NEBRASKA - EAST CAMPUS
LINCOLN, NEBRASKA 68583-0832, USA

REPORT ON TEST IN ACCORDANCE WITH OECD STANDARD CODE FOR THE OFFICIAL TESTING OF AGRICULTURAL TRACTOR PERFORMANCE

CATERPILLAR CHALLENGER 65D RUBBER TRACKED TRACTOR.

MANUFACTURED BY	:	Caterpillar Inc. 100 N.E. Adams Street Peoria, Illinois 61629, USA
NEBRASKA TEST NO.	:	1706
TEST DATES	:	March 19 through April 4, 1996

This test report provides the results of the tests conducted in accordance with the OECD Restricted Test Code for the Official Testing of Agricultural Tractor Performance - C(87)53 Final - Annex II.

This report has been approved by the OECD Coordinating Centre in Paris (CEMAGREF) on 7 May, 1996

Caterpillar Challenger 65D Rubber-Tracked Tractor OECD # 1614

Associate Director

Dr. Louis T. Leviticus

Senior Test Engineer

David L. Morgan

Test Engineer

Brent T. Sampson

Chairman, Tractor Test Board

Dr. Leonard L. Bashford

Members, Tractor Test Board

Dr. Robert R. Grisso

Dr. Michael F. Kocher

Date: May 23, 1996

LINCOLN, NEBRASKA 68583-0832,USA

TABLE OF CONTENTS

SPECIFICATIONS OF TRACTOR

GENERAL

Manufacturers name/address	Caterpillar Inc. 100 N.E. Adams Street Peoria, IL 61629 USA
Location of tractor assembly	12101 Barber Greene Road DeKalb, IL, USA
Submitted for test by	The manufacturer.
Selected for test by	The manufacturer in agreement with the test station.
Place of running in	Caterpillar proving grounds Peoria Illinois
Duration of running in	97 hours
Location of test	Tractor Testing laboratory University of Nebraska Lincoln, Nebraska, USA

SPECIFICATIONS OF TRACTOR.

Make/Model/Type	Caterpillar Challenger 65D, Unit construction, Track laying
Number of driving members	Two rubber tracks.
Serial number	2ZJ02010
1st Serial number	Confidential

ENGINE.

Make	Caterpillar
Model	3306 JWAC
Type	Diesel, direct injection, turbocharged and aftercooled
Serial Number	08Z88981

Cylinders

Number/Disposition	6, in-line, vertical
Bore/Stroke	120.6 mm x 152.4 mm
Cubic capacity	10459 cm^3
Compression Ratio	15.0 to 1
Arrangement of valves	Overhead
Cylinder liners	Wet, replaceable

Turbocharging

Make/Model/Type	Schwitzer/S3BSL128/radial flow; exhaust gas driven.
Pressure	134 - 181 kPa at rated engine speed and full load

Intercooler

Make/model/type	Caterpillar/Jacket coolant water to air.

Fuel System	
Fuel Feed system	Engine driven transfer pump
Make/Model/Type of filters	Caterpillar/9M2341/Primary-washer-screen type; 1R0749/Secondary-paper spin-on element
Fuel tank capacity	796 liters
Make/Model/Type of Injection	Caterpillar/mechanically activated unit injector system
Flow rate setting of pump at at rated engine speed and full load	51 +/- 2.5 kg/hr
Fuel density	0.842 kg/liter
Make/Model/Type of injectors	Caterpillar part # 100-7563
Injection pressure	103 MPa
Timing	Variable, mechanically controlled
Governor	
Make/Model/Type	Caterpillar/Hydro-Mechanical
Governed engine speed range	From 930 to 2320 rev/min
Rated engine speed	2100 rev/min
high-idle speed range	2320 +/- 60 rev/min
Air Cleaner.	
Pre-cleaner	
Make/Model/Type	Donaldson/DSH00-680/with dust ejector
Air intake location	Above right front fender
Main Cleaner	
Make/Model/Type	Donaldson/ERB120361/Dry, paper dual element
Maintenance indicator	Restriction gauge in air intake near air cleaner
Lubrication system.	
Type of feed pump	Gear pump
Type of filters	Spin - on, Caterpillar 1R0739
Number	One
Oil cooler	Heat exchanger with engine coolant
Cooling System.	
Type of coolant	Liquid
Type of pump	Centrifugal, gear driven
Fan specification	
Number of fan blades	8
Fan diameter	914 mm
Coolant capacity	42 liter
Type of temperature control	Thermostat
Superpressure system	48 kPa

Starting system.	
Make/Model/Type of starter	Delco/42MT/Solenoid engaged
Power Rating	5.6 kW
Cold starting aid	Ether spray in intake manifold.
Safety device	Transmission neutral switch.
Electrical System.	
Voltage & grounding.	12 Volt DC;negative ground
Alternator	
Make/Model/Type	Delco Remy/19010180/
Power rating	145 A at 2100 engine rev/min
Batteries	
Number & connection	2-12 V batteries in parallel
Rating	100 Ampere-hours per battery at 20 hour rating.
Exhaust system.	
Make/Model/Type	Donaldson/M120580/expansion chamber, 305 mm diameter
Location	Muffler and exhaust pipe vertical on right front fender
TRANSMISSION	
Clutch. (travel alone)	
Make/Model/Type	Caterpillar, wet multiplate, integral with transmission, oil cooled
Number of plates	6
Diameter of plates	190 mm
Method of operation	Hydraulic, pedal actuated.
Gear Box. (1)	
Make/Model/Type	Caterpillar, direct drive, full powershift, mechanical
Arrangement	Four rotating countershaft clutches and four stationary planetary clutches
Number of gears	10 forward and 2 reverse, controlled by a single hand lever
Oil cooler	heat exchanger with engine coolant
Available options	none
Rear axle and final drives.	
Make/Model/Type	Caterpillar/outboard single reduction pinion and bull gear
Differential lock	Not applicable

Gear ratios and travel speeds.

Gear Number	Number of Engine revolutions for one revolution of the driving wheels	Nominal travel speed at rated engine speed of 2100 rev/min [km/h]
1 fwd	97.993	4.24
2 fwd	64.902	6.42
3 fwd	55.501	7.50
4 fwd	48.538	8.58
5 fwd	42.318	9.84
6 fwd	36.759	11.33
7 fwd	32.147	12.96
8 fwd	28.029	14.85
9 fwd	21.776	19.11
10 fwd	14.423	28.86
1 rev	133.628	3.11
2 rev	57.707	7.20

Calculated with a dynamic rolling radius of 526 mm.

POWER - TAKE - OFF.

Main Power-Take-Off.

Type	Independent
Method of engagement	Multiplate wet clutch hydraulically actuated by lever; independent of main drive clutch
Number of shafts	One

Power take-off proportional to engine speed - 1000 rev/min.

Location	Rear of tractor in vertical center plane.
Diameter of shaft	45 mm
Number of splines	20; conforms to ISO 500/1991.
Height above ground	746 mm
Distance from median plane of tractor	0 mm
Distance behind rear axle	382 mm
PTO Speed at rated engine spd	1024 rev/min
Engine speed at std PTO spd	2050
Ratio of Engine rpm to PTO rpm	2.05 to 1
Direction of Rotation (viewed facing driving end)	Clockwise.

POWER LIFT AND HYDRAULIC SYSTEM

Make	Caterpillar
Type of hydraulic system	Closed center; Load sensing
Number/Type of cylinders	Two external; single acting
Linkage lock for transport	Electrohydraulic position control
Make/Model/Type	Rexroth/1602-552-360/Stack type Individual flow control spools Closed center system
Make/Model/Type of Pump	Vickers/PVE 21L/Axial piston; pressure and flow compensated
Compensator pressure setting	19.0 ± 0.35 MPa
Relief/safety valve opening pressure	20.7 ± 0.30 MPa
Type of pump drive	Gear driven from transmission
Type/Number of filters	One spin-on cartridge; screen in return line
Location of oil reservoir	Behind cab, left side
Make/Model/Type of implement valves	Rexroth/1602-552-360/Stack Type; Cable actuated; Individual flow control spools
Type/Number/Location of tapping points	ISO-5675 standard/4 pairs/ rear of tractor
Oil cooler	Air-to-oil heat exchanger
Max. oil volume available for external cylinders.	40 liters

THREE POINT LINKAGE.

- Category 3 in conformity with ISO 730/1-1990
- Category adaptor None

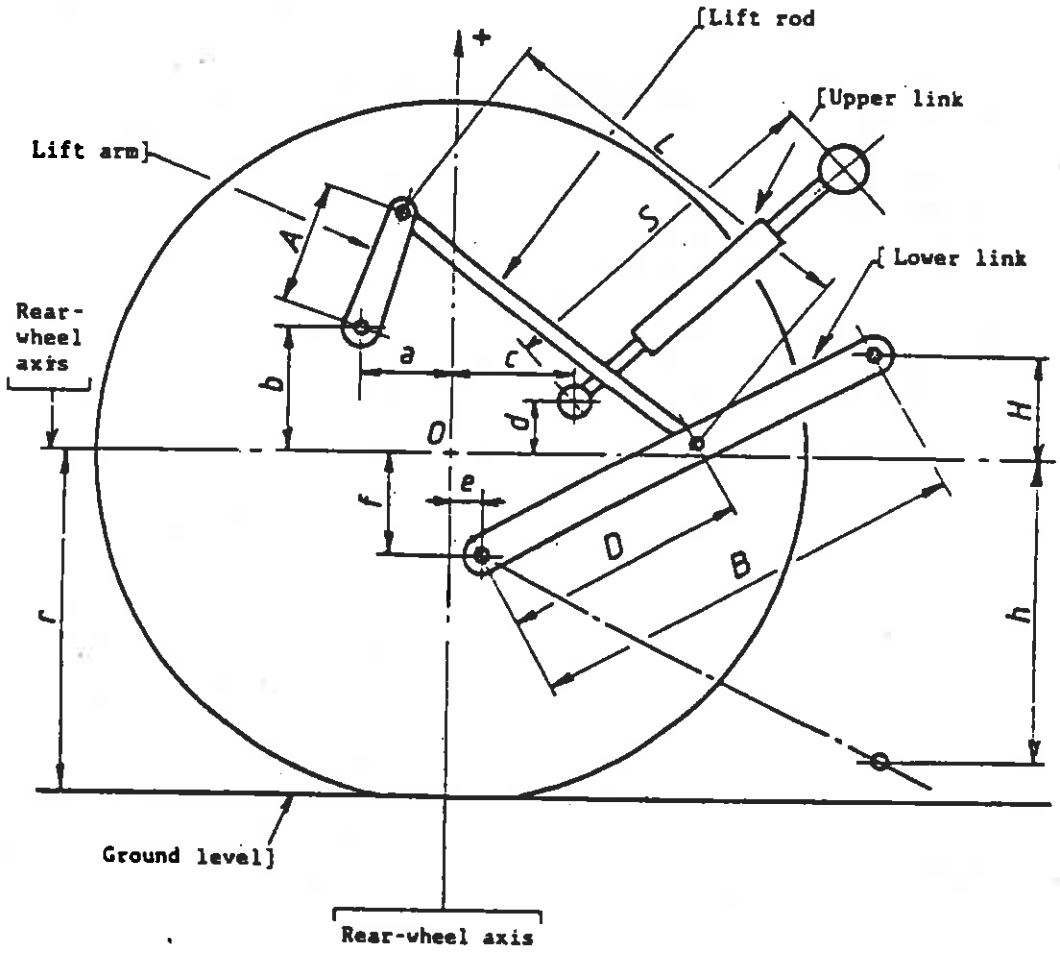

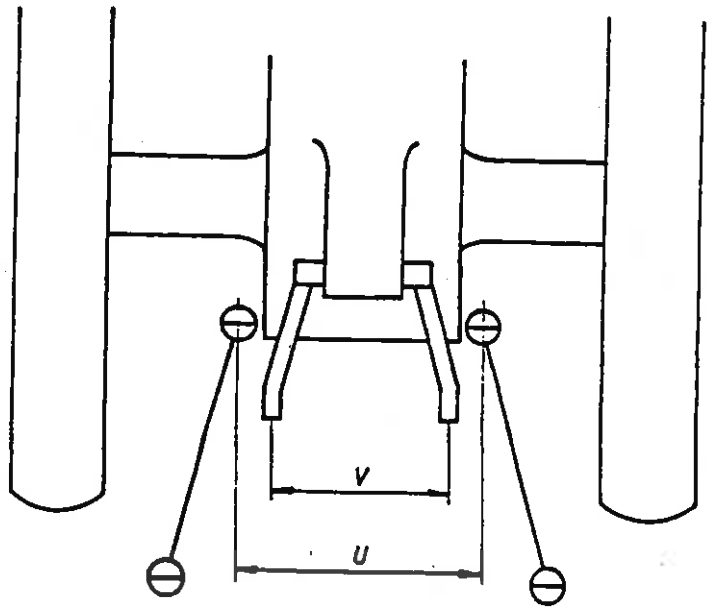

Table 1. - *Linkage geometry dimensions.

		Dimension or range [mm]	Settings used on test [mm]
Category		III	
Length of lift arms	(A)	545	same
Length of lower links	(B)	765	same
Distance of lift arm pivot from rear wheel axis			
horizontal	(a)	225	same
vertical	(b)	415	same
Horizontal distance between the 2 lower link points	(u)	860	same
Horizontal distance between the 2 lift arm end points	(v)	1040	same
Length of upper link	(s)	640 to 740	678
Distance of upper link pivot from rear axle centerline			
horizontal	(c)	370	same
vertical	(d)	422	same
Distance of lower link pivot from rear wheel axis			
horizontal	(e)	265	same
vertical	(f)	98	same
Distance of lower link pivot points to lift rod pivot points on lower links.	(D)	535	same
Length of lift rods	(L)	560 to 665	663
Height of lower hitch points relative to rear axle:			
In low position	(h)	230 to 375	371
In high position	(H)	470 to 350	384
Height above ground of lower hitch points when locked in transport position.		950 to 1070	962

*Calculated with a rear axle center line height of 600 mm

SWINGING DRAWBAR.

Type		Oscillating
Height above ground		376 mm
Adjustments		None
Distance of hitch point from rear axle:	horizontal	882 mm
	vertical	177 mm below axle
Distance of hitch point from PTO shaft end:	Vertical	307 mm below shaft
	Horizontal	500 mm
Lateral adjustment;	Right side	148 mm
	Left side	148 mm
Distance of pivot point from rear axle:	horizontal	731 mm
Diameter of drawbar pin hole		50 mm
Maximum vertical static permissible load:		18 kN

STEERING.

Make/Model/Type	Caterpillar/Differential steer
Method of operation	Sauer-Sundstrand piston pump and Linde motor; steering wheel controlling pilot activated valves
Working pressure	41.8 MPa
Oil cooler	Air-to-oil radiator in front of main radiator

BRAKES

Service brake.

Make/Model/Type	Caterpillar/Multiple wet disc in steering differential
Method of operation	Manual/Hydraulically boosted master cylinder; pedal operated
Trailer braking take-off	None

Parking brake.

Type	Caliper, dry disc.
Method of operation	Mechanical lever operated

PROTECTIVE STRUCTURE

Make/Model/Type	Caterpillar/124-4644/Cab
Manufacturers name/address	Caterpillar Inc. 100 N.E. Adams street Peoria, Ill. 61629, USA
Protective device	Cab, not tiltable.
OECD approval number	None. Tested according to ISO 3471-1986; ISO 3449-1992

DRIVER'S SEAT.

Make/Model/Type	SEARS/SA12055/low profile
Optional seat	None
Type of suspension	Air suspension
Type of damping	Air spring and adjustable oil shocks with three positions.
Range of adjustment	
Longitudinal	178 mm
Vertical	76 mm adjustment plus 80 mm suspension

LIGHTING.

	Height above ground of center [mm]	Size [mmxmm]	Distance from outside edge to median plane of tractor [mm]
Headlights	2047	102x156	256
Tail lights	1439	110x110	1147
Rear reflectors	1439	110x110	1035
Stop lights	1439	110x110	1261
Rear Work Lights	3184	139x139	676

TEST CONDITIONS.

Overall dimensions.

Length	5894 mm
Width - Minimum	3048 mm
Height - Top of Cab	3240 mm
- Top of exhaust	3668 mm
Ground clearance	327 mm
Clearance-limiting part	Drawbar anchor point

Tractor Mass (with Cab) - Unballasted

	Without driver [kg]	With driver [kg]
Total shipping	14705	14780
Total with full fuel tank	15982	16057

TRACK SPECIFICATIONS.

Track materials	Rubber covered steel cables
Track width and base	762 mm, 2721 mm
Dynamic rolling radius under drive wheel	526 mm
Static distance of rear axle above ground	600 mm
Track support system	4 bogey axles with pneumatic suspension; oscillating front axle (+/- 3°)
Tread bars Number	8.2 treads/m
Track weight	564 kg each
Track length	8529 mm

Oils and Lubrication.

Capacity and change interval:

	Capacity litre	Oil change hours	Filter change hours
Engine (w/o filter)	26	250	250
Transmission	57	1000	500
Differential/final drive	209	1000	--
Hydraulic system + steering system	110	1000	1000

Oil and Lubricant specifications:

	Recommended	Used during test
Engine oil		
Type	Caterpillar Fluids	
Viscosity	SAE 15W40	SAE 10W30
Classification	API-CF-4	
Transmission		
Type	Caterpillar Fluids	same
Viscosity	SAE 30W	
Classification	TO-4	
Hydraulic fluid		
Type	Caterpillar Fluids	same
Viscosity	SAE 10W	
Classification	HYDO	
Grease	MPGM NLGI No.2	
Number of lubrication points	4	

Fuel.

Type/grade	Grade 2-D, in conformity with the national standard
Density (Pto test)	0.842 g/cm³ (kg/liter) at 15°C
(Drawbar test)	Same as Pto test.
Cetane number	50.6
Viscosity	2.39 cSt at 38°C

COMPULSORY TESTS

1. MAIN POWER TAKE OFF

Date: 2-Apr-96 Location: UNL Tractor Test Lab, Lincoln, NE, USA

Type of dynamometer: Eddy current, Eaton

Fuel Density 0.842 kg/l

Power kW / *hp*	Engine rev/min	PTO rev/min	l/h / *gal/h*	kg/h / *lb/hr*	kg/kW-h / *lb/hp-h*	kW-h/l / *hp-h/gal*
1.1 Maximum Power - 2 Hours						
200.14	2050	1000	60.93	51.28	0.256	3.28
268.39			*16.10*	*113.05*	*0.421*	*16.67*
1.2 Power at Rated Engine Speed - 1 hour						
191.01	2100	1024	58.65	49.36	0.258	3.26
256.15			*15.49*	*108.81*	*0.425*	*16.53*
1.3 Power at Standard Power Take Off Speed - 1 hour						
200.14	2050	1000	60.93	51.28	0.256	3.28
268.39			*16.10*	*113.05*	*0.421*	*16.67*
1.4 Part Loads						
1.4.1 Torque at maximum power at rated engine speed						
191.01	2100	1024	58.65	49.36	0.258	3.26
256.15			*15.49*	*108.81*	*0.425*	*16.53*
1.4.2 85% of torque obtained in 1.4.1						
166.91	2157	1052	52.23	43.95	0.263	3.20
223.84			*13.80*	*96.90*	*0.433*	*16.22*
1.4.3 75% of torque defined in 1.4.2						
127.56	2207	1076	42.53	35.79	0.281	3.00
171.07			*11.23*	*78.90*	*0.461*	*15.23*
1.4.4 50% of torque defined in 1.4.2						
86.91	2252	1098	33.80	28.44	0.327	2.57
116.55			*8.93*	*62.70*	*0.538*	*13.05*
1.4.5 25% of torque defined in 1.4.2						
44.45	2292	1118	24.26	20.41	0.459	1.83
59.60			*6.41*	*45.00*	*0.755*	*9.30*
1.4.6 unloaded						
0.80	2320	1131	15.36	12.93	16.101	0.05
1.08			*4.06*	*28.50*	*26.470*	*0.27*
1.5 Part Loads at Standard Power Take Off Speed						
1.5.1 Torque at maximum power						
200.14	2050	1000	60.93	51.28	0.256	3.28
268.39			*16.10*	*113.05*	*0.421*	*16.67*
1.5.2 85% of torque obtained in 1.5.1						
174.13	2097	1022	53.68	45.18	0.259	3.24
233.51			*14.18*	*99.60*	*0.427*	*16.46*
1.5.3 75% of torque defined in 1.5.2						
133.53	2143	1045	43.17	36.33	0.272	3.09
179.07			*11.41*	*80.10*	*0.447*	*15.70*
1.5.4 50% of torque defined in 1.5.2						
91.07	2191	1069	33.80	28.44	0.312	2.69
122.12			*8.93*	*62.70*	*0.513*	*13.68*
1.5.5 25% of torque defined in 1.5.2						
46.81	2236	1090	24.26	20.41	0.436	1.93
62.78			*6.41*	*45.00*	*0.717*	*9.80*
1.5.6 unloaded						
0.79	2269	1106	15.36	12.93	16.465	0.05
1.05			*4.06*	*28.50*	*27.068*	*0.26*

No load maximum engine speed:	2320 rev/min	
Equivalent torque at rated speed:	869 N.m	641 lb-ft
Equivalent torque at maximum power:	932 N.m	688 lb-ft
(engine speed:	2050 rev/min)	
Maximum equivalent crankshaft torque:	1212 N.m	894 lb-ft
(engine speed:	1300 rev/min)	
Mean Dry bulb:	24 deg C	76 deg F
Wet bulb:	13 deg C	56 deg F
Relative Humidity	26 %	
Pressure:	96.7 kPa	28.57 in Hg
Maximum Coolant:	103 deg C	218 deg F
Engine Oil:	107 deg C	224 deg F
Fuel:	59 deg C	138 deg F
Air Intake:	44 deg C	111 deg F
Transmission/hydraulic oil:	52 deg C	126 deg F
Intake manifold pressure at rated speed:	139 kPa	20.2 psig
Intake manifold pressure at maximum power:	149 kPa	21.7 psig

Date of Test	4-Apr-96
Location of Test-City-State:	Tractor Test Lab, Lincoln, NE, USA
Tapping point used for test:	Remote hydraulic outlets

I. Sustained pressure with pump stalled:

19.24	MPa
2790	*psig*

II. Pump delivery rate at minumum pressure and rated engine speed:

97.3	l/min
25.7	*gpm*

III. Flow rate, pressure, power:

90% of relief valve setting

81.4	l/min	17.24	MPa	23.4	kW
21.5	*gpm*	*2500*	*psig*	*31.4*	*hp*

Maximum hydraulic power:

80.6	l/min	18.20	MPa	24.5	kW
21.3	*gpm*	*2640*	*psig*	*32.8*	*hp*

IV. Hydraulic fluid temperature at flow meter

64	°C
147	*°F*

Note: This hydraulic system does not use an accumulator.
Opening and closing pressures of the unloading valve could not be measured.

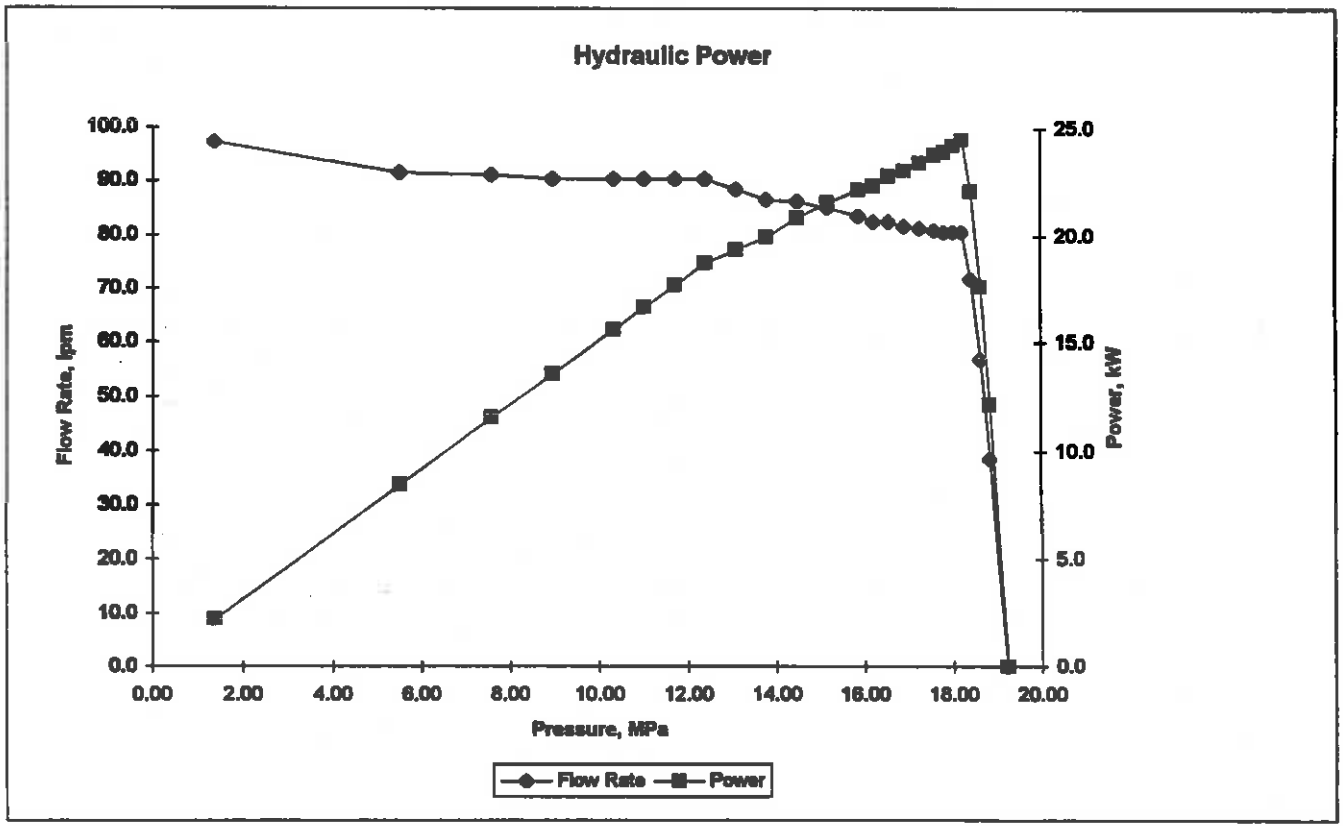

2.2 POWER LIFT TEST.

Date of test: 14 March 1996

		Hitch points	Frame
Lower hitch points above ground - down position:	[mm/in]	229/9.0	157/6.2
Vertical movement: without load:	[mm/in]	730/28.8	946/37.3
with load:	[mm/in]	706/27.8	904/35.6
Maximum corrected force through full range:	[kN/lb]	88.3/19858	58.2/13086
Corresponding pressure:	[MPa/psi]	17.0/2470	
Moment about rear axle:	[kN.m/lb.ft]	91.1/67185	95.5/70446
Maximum mast tilt angle:	[deg]	--	12.0

Lifting height relative to horizontal position of lower links.

[mm]	-351	-279	-203	-99	0
[in]	-13.8	-11.0	-8.0	-3.9	0

Corrected lift forces

Hitch [kN]	--	140.8	131.2	123.3	114.9
point. [lb]	--	31662	29502	27702	25830
at [kN]	116.8	107.2	--	101.2	93.8
frame [lb]	26262	24102	--	22752	21078

Lifting height relative to horizontal position of lower links.

[mm]	99	201	300	401	427	554
[in]	3.9	7.9	11.8	15.8	16.8	21.8

Corrected lift forces

Hitch [kN]	108.2	101.4	98.6	90.9	88.3	--
point [lb]	24318	22806	22158	20430	19858	--
at [kN]	87.3	79.8	--	70.7	--	58.2
frame [lb]	19620	17946	--	15894	--	13086

OECD Drawbar Data (SI)

Date of tests: 03-Apr-96 | Fuel density: 0.842 kg/l
Type of track: Concrete | Test number: 1706

Gear	Power kW	Pull kN	Speed km/h	Engine speed rev/min	Slip	SFC kg/kW.h	SFE kW.h/l	Temperature, deg C Fuel	Coolant	Oil	Dry	Wet	Rel hum-idity	Barc. Pres kPa
I. Maximum Power (unballasted, track drive at 2100 rev/min)												Drawbar height:	457 mm	
1	182.34	149.62	3.91	2098	8%	0.310	2.72	62	81	74	8	6	67%	96.85
2	172.64	98.96	6.28	2096	2%	0.293	2.87	61	81	74	8	6	67%	96.85
3	175.43	85.66	7.37	2092	2%	0.289	2.91	61	82	53	9	6	62%	96.85
4	174.18	74.20	8.45	2094	1%	0.292	2.89	60	82	51	10	6	58%	96.99
5	170.38	63.17	9.71	2092	1%	0.298	2.83	62	83	67	11	6	53%	96.99
6	166.70	53.51	11.22	2096	1%	0.307	2.74	60	82	64	11	6	53%	96.99
7	163.67	45.99	12.81	2093	1%	0.311	2.71	60	83	47	11	6	53%	96.99
8	158.73	38.78	14.73	2096	1%	0.316	2.66	60	83	44	11	6	53%	96.99
II. Part loads (unballasted, track drive)														
II.1 in selected gear at maximum power at rated engine speed														
3	175.43	85.66	7.37	2092	2%	0.289	2.91	61	82	53	9	6	62%	96.85
II.1.1 75% of pull at maximum power at rated engine speed														
3	135.62	63.36	7.70	2177	1%	0.314	2.68	59	81	39	9	6	57%	97.05
II.1.2 50% of pull at maximum power at rated engine speed														
3	93.08	42.33	7.92	2230	1%	0.362	2.32	59	79	36	9	6	57%	97.05
II.1.3 higher gear at reduced engine speed, same pull and travel speed as II.1.1														
5	135.30	63.43	7.68	1655	1%	0.280	3.00	54	81	42	9	6	57%	97.05
II.1.4 higher gear at reduced engine speed, same pull and travel speed as II.1.2														
5	93.04	42.28	7.92	1701	1%	0.308	2.73	53	78	36	9	6	57%	97.05
II.2 in selected gear nearest to 7.5 km/h at rated engine speed														
3	175.43	85.66	7.37	2092	2%	0.289	2.91	61	82	53	9	6	62%	96.85
II.2.1 75% of pull at maximum power at rated engine speed														
3	135.62	63.36	7.70	2177	1%	0.314	2.68	59	81	39	9	6	57%	97.05
II.2.2 50% of pull at maximum power at rated engine speed														
3	93.08	42.33	7.92	2230	1%	0.362	2.32	59	79	36	9	6	57%	97.05
II.2.3 higher gear at reduced engine speed, same pull and travel speed as II.2.1														
5	135.30	63.43	7.68	1655	1%	0.280	3.00	54	81	42	9	6	57%	97.05
II.2.4 higher gear at reduced engine speed, same pull and travel speed as II.2.2														
5	93.04	42.28	7.92	1701	1%	0.308	2.73	53	78	36	9	6	57%	97.05

OECD Drawbar Data (US)

Date of tests: 03-Apr-96 | Fuel density: 7.023 lb/gal
Type of track: Concrete | Test number: 1706

Gear	Power hp	Pull lb	Speed mph	Engine speed rev/min	Slip	SFC lb/hp.h	SFE hp.h/gal	Temperature, deg F Fuel	Coolant	Oil	Dry	Wet	Rel hum-idity	Barc. Pres in Hg
I. Maximum Power (unballasted, track drive at 2100 rev/min)						Tire pressure:		psig, rear		psig, front		Drawbar height:	18.0 in	
1	217.71	33636	2.43	2098	8%	0.509	13.79	143	178	165	47	42	67%	28.60
2	231.52	22247	3.90	2096	2%	0.482	14.56	141	178	165	47	42	67%	28.60
3	235.26	19258	4.58	2092	2%	0.475	14.79	142	180	127	48	42	62%	28.60
4	233.59	16681	5.25	2094	1%	0.480	14.65	140	180	124	50	43	58%	28.64
5	228.49	14201	6.03	2092	1%	0.489	14.35	143	181	153	51	43	53%	28.64
6	223.55	12029	6.97	2096	1%	0.505	13.90	140	180	148	51	43	53%	28.64
7	219.49	10338	7.96	2093	1%	0.511	13.73	140	181	117	51	43	53%	28.64
8	212.86	8719	9.16	2096	1%	0.520	13.50	140	181	112	51	43	53%	28.64
II. Part loads (unballasted, track drive)														
II.1 in selected gear at maximum power at rated engine speed														
3	235.26	19258	4.58	2092	2%	0.475	14.79	142	180	127	48	42	62%	28.60
II.1.1 75% of pull at maximum power at rated engine speed														
3	181.87	14245	4.79	2177	1%	0.516	13.62	138	177	103	49	42	57%	28.66
II.1.2 50% of pull at maximum power at rated engine speed														
3	124.82	9516	4.92	2230	1%	0.595	11.80	138	174	97	49	42	57%	28.66
II.1.3 higher gear at reduced engine speed, same pull and travel speed as II.1.1														
5	181.44	14261	4.77	1655	1%	0.461	15.24	129	177	108	49	42	57%	28.66
II.1.4 higher gear at reduced engine speed, same pull and travel speed as II.1.2														
5	124.77	9505	4.92	1701	1%	0.506	13.87	127	173	98	49	42	57%	28.66
II.2 in selected gear nearest to 4.6 mph at rated engine speed														
3	235.26	19258	4.58	2092	2%	0.475	14.79	142	180	127	48	42	62%	28.60
II.2.1 75% of pull at maximum power at rated engine speed														
3	181.87	14245	4.79	2177	1%	0.516	13.62	138	177	103	49	42	57%	28.66
II.2.2 50% of pull at maximum power at rated engine speed														
3	124.82	9516	4.92	2230	1%	0.595	11.80	138	174	97	49	42	57%	28.66
II.2.3 higher gear at reduced engine speed, same pull and travel speed as II.2.1														
5	181.44	14261	4.77	1655	1%	0.461	15.24	129	177	108	49	42	57%	28.66
II.2.4 higher gear at reduced engine speed, same pull and travel speed as II.2.2														
5	124.77	9505	4.92	1701	1%	0.506	13.87	127	173	98	49	42	57%	28.66

Caterpillar Challenger 65D

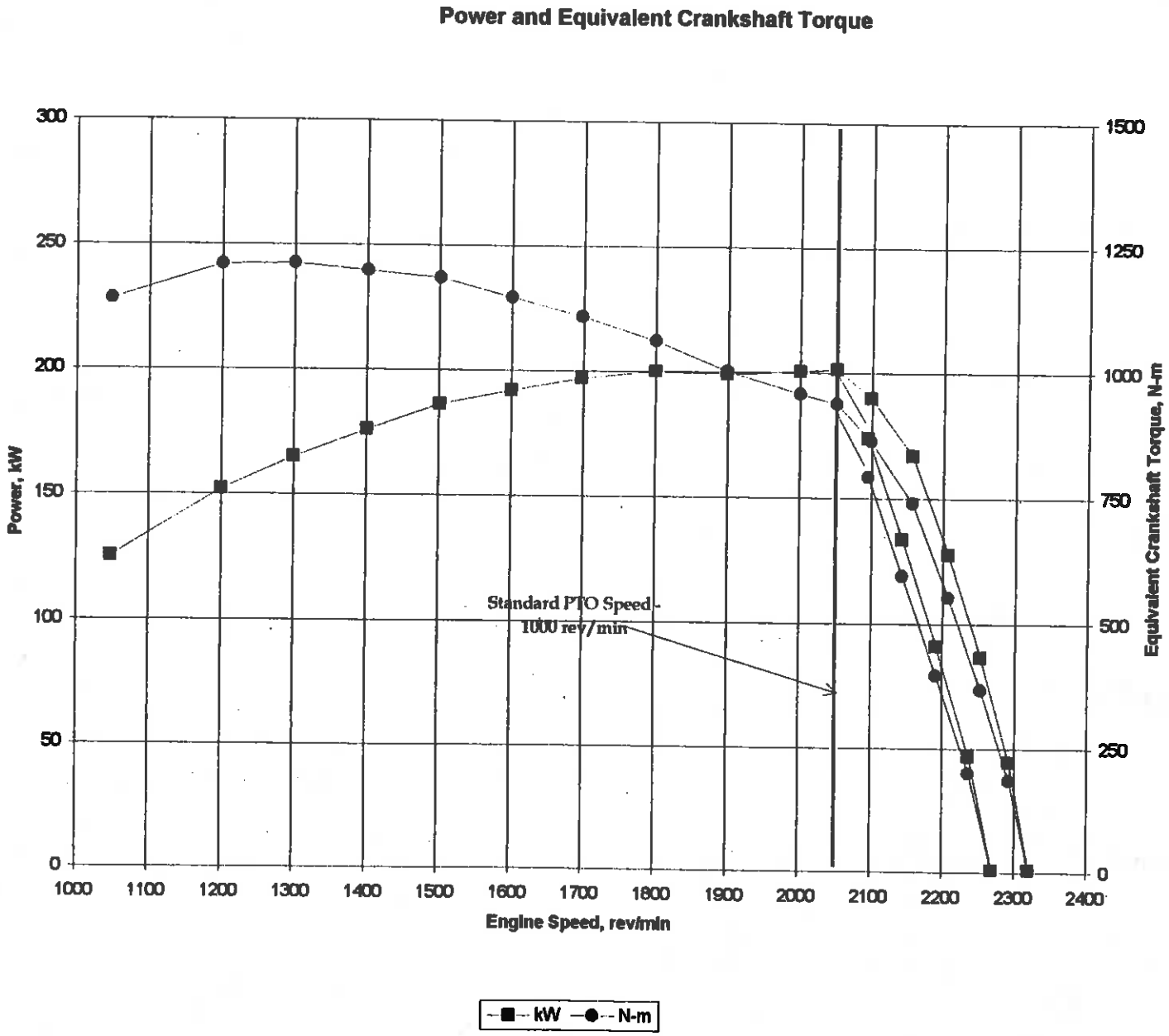

Specific Fuel Consumption and Fuel Rate

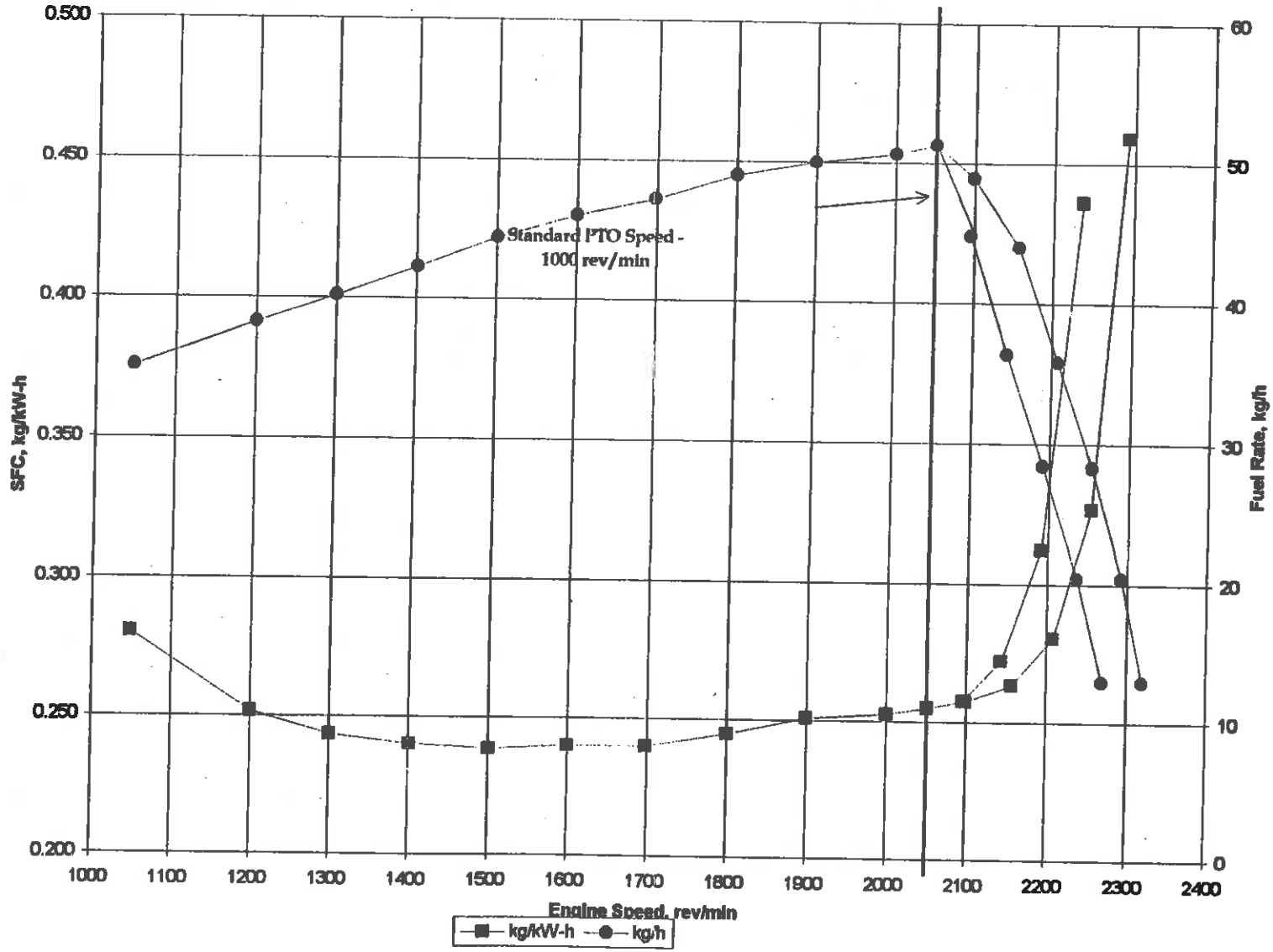

Caterpillar Challenger 65D

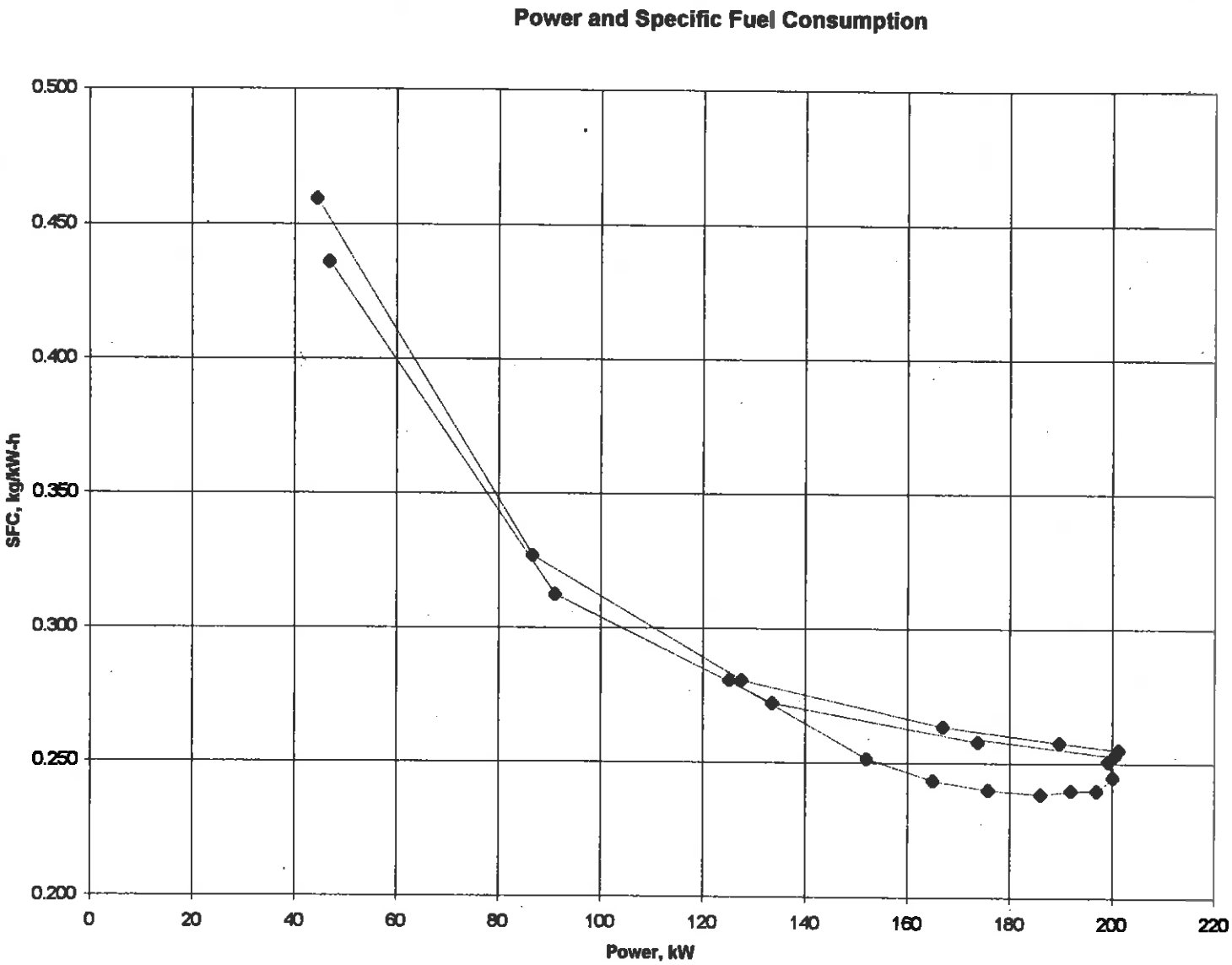

OPTIONAL TESTS - DRAWBAR PERFORMANCE AT 2050 ENGINE RPM

OECD Drawbar Data (SI)

Date of tests:	03-Apr-96	Fuel density:	0.842 kg/l
Type of track:	Concrete	Test number:	1706

Gear	Power kW	Pull kN	Speed km/h	Engine speed rev/min	Slip	SFC kg/kW.h	SFE kW.h/l	Temperature, deg C Fuel	Coolant	Oil	Dry	Wet	Rel humidity	Barom. Pres kPa
I. Maximum Power (unballasted, track drive at 2050 rev/min)												Drawbar height:	457 mm	
*1	159.27	157.92	3.63	2065	13%	0.326	2.58	62	81	69	8	6	67%	96.85
2	178.94	104.99	6.14	2054	2%	0.290	2.90	61	82	76	8	6	67%	96.85
3	180.03	89.84	7.21	2055	2%	0.289	2.92	62	82	63	9	6	57%	96.92
4	179.07	77.81	8.29	2055	1%	0.290	2.90	62	83	65	10	6	58%	96.99
5	176.97	67.05	9.50	2049	1%	0.294	2.86	61	83	82	11	6	53%	96.99
6	173.75	57.30	10.92	2042	1%	0.301	2.80	61	83	78	11	6	53%	96.99
7	170.71	49.08	12.52	2045	1%	0.305	2.75	60	83	49	11	6	53%	96.99
8	167.17	41.74	14.42	2052	1%	0.309	2.72	60	83	46	11	6	53%	96.99

Note: Slip within operating conditions of test station

OECD Drawbar Data (US)

Date of tests:	03-Apr-96	Fuel density:	7.023 lb/gal
Type of track:	Concrete	Test number:	1706

Gear	Power hp	Pull lb	Speed mph	Engine speed rev/min	Slip	SFC lb/hp.h	SFE hp.h/gal	Temperature, deg F Fuel	Coolant	Oil	Dry	Wet	Rel humidity	Barom. Pres in Hg
I. Maximum Power (unballasted, track drive at 2050 rev/min)												Drawbar height:	18.0 in	
*1	213.58	35502	2.26	2065	13%	0.537	13.09	143	178	157	47	42	67%	28.60
2	239.96	23603	3.81	2054	2%	0.477	14.71	142	180	169	47	42	67%	28.60
3	241.42	20197	4.48	2055	2%	0.474	14.80	144	180	146	49	42	57%	28.62
4	240.14	17492	5.15	2055	1%	0.477	14.74	143	181	149	50	43	58%	28.64
5	237.33	15073	5.90	2049	1%	0.483	14.53	142	182	180	51	43	53%	28.64
6	233.00	12881	6.78	2042	1%	0.495	14.19	141	182	173	51	43	53%	28.64
7	228.92	11035	7.78	2045	1%	0.502	13.98	141	182	121	51	43	53%	28.64
8	224.18	9383	8.96	2052	1%	0.509	13.81	140	182	115	51	43	53%	28.64

*Note: Slip within operating conditions of test station

Repairs: None
Remarks: During the sustained 2-hour PTO test at Maximum Power air was used to cool the PTO drive. This is in accordance with the recommendations in the tractor's Operation and Maintenance Manual.