ISTITUTO SPERIMENTALE PER
LA MECCANIZZAZIONE AGRICOLA

SEZIONE DI TREVIGLIO

O.E.C.D. no. 1147

Test in accordance with O.E.C.D. Restricted Standard Code for the official testing of agricultural tractors

Submitted for test by: S+L+H S.p.A
V.le Cassani, 15
24047 Treviglio (BG)

Date of O.E.C.D approval: 15.06.1988

Period of test: May 1988

I.S.M.A. - TREVIGLIO
Via Milano, 43

Test no.042

ISTITUTO SPERIMENTALE PER
LA MECCANIZZAZIONE AGRICOLA

SEZIONE DI TREVIGLIO

O.E.C.D. no. 1147

Test in accordance with O.E.C.D. Restricted Standard Code for the official testing of agricultural tractors

Submitted for test by: S+L+H S.p.A
V.le Cassani, 15
24047 Treviglio (BG)

Date of O.E.C.D. approval: 15.06.1988

Period of test: May 1988

I.S.M.A. - TREVIGLI
Via Milano, 43

Test no.042

TABLE OF CONTENTS

All stated dimensions and tests referred to tyre size 9.5/20 (8 ply) at front and 14.9/28 (6 ply) at rear, as well as to track widths 1200 mm at front and 1060 mm at rear.

- Tractor manufacturer
  . Name : S + L + H S.p.A.
  . Address: V.le Cassani, 15 - 24047 TREVIGLIO (BG) - ITALY
- Location of tractor assembly: TREVIGLIO (BG) - ITALY;
- Submitted for test by: the manufacturer;
- Selected by: the manufacturer with the agreement of ISMA;
- Place of running in: TREVIGLIO (BG) - ITALY;
- Duration of running in: 50 hours.
- Location of test: I.S.M.A. - Via Milano, 43 - Treviglio (Bg) - ITALY

I - SPECIFICATION OF TRACTOR

TRACTOR

- Make: SAME;
- Model: FRUTTETO 75 DT (4WD);
- Type: wheeled tractor, unit constr.,all wheels drive tractor
- Number of driving wheels: 4;
- Serial number: 1362;
- First serial number: 1001.

ENGINE

- Make: S + L + H;
- Model: 1000.4 A2;
- Type : aircooled 4 stroke diesel engine direct injection;
- Serial number: 8009.

Cylinders

- Number/disposition: 4 vertical in line;
- Bore/stroke: 105*115.5 mm;
- Capacity: 4000 cm^3;
- Compression ratio: 17.1/1;
- Arrangement of valves: overhead;
- Cylinder liners: without liners.

Supercharging: none.

Fuel system

- Fuel feed system: AC corone fuel feed pump;
- Make, model and type of fuel filter: FIAMM Fna 160/00;
- Capacity of fuel tank: 55 dm^3;
- Make, model and type of injection pump: BOSCH PFR 1K 90A 503, immersed pump, one per cylinder, without serial number, in line injection pump;
- Manufacturer's production setting of injection pump:
  . flow rate: 51 ± 2 mm^3/stroke at rated speed and full load corresponding to 15.33 dm^3/h;
  . timing: 18 ± 0.5° before TDC;
- Make, model and type of injectors: BOSCH DLLA 150 S 925 multihole injection nozzles;
- Injection pressure: 18 ± 1.5 MPa.

Governor

- Make: own make;
- Model: 9.06599.41;
- Type: mechanical variable speed;
- Governor range of engine speed: from 675 to 2623 rev/min;
- Rated engine speed: 2500 rev/min.

Air Cleaner

- Main filter
  . make: FIAMM;
  . model: FAR 345;
  . type: dry paper element filter;
  . location: behind of engine;
- Maintenance indicator: with the warning lamp on the dashboard.

Lubrication system

- Type of feed pump: forced feed from gear pump;
- Total oil capacity including filter: 9.2 dm^3;
- Oil change period: 150 hrs;
- Type of filter: FIAMM FT 4803 IN;
- Number: 1;
- Filter change period: 300 hrs;
- Oil specifications: see page 19.

Cooling system

- Type and detail: air cooling with axial blower,
- Specification of fan: propeller fan driven by engine shaft;
- Number of fan blades: 13;
- Fan diameter: 250 mm;
- Type of temperature control: none.

Starting system

- Make: MARELLI;
- Model: MT 68D 3.5/12D9;
- Type: electromagnetic engagement;
- Starter motor power rating: 3.5 kW;
- Safety device: preventing engine start on the clutch pedal;
- Starting system for low temperatures: none.

Electrical equipement

- Voltage: 12 V;
- Generator
  . make: MARELLI;
  . model: AA 125 E 14 V-45A;
  . type: alternator;
  . power: 630 W;
- Battery: 1 lead acid;
  . capacity: 110 Ah at 20 hours.

Exhaust system

- Make: S+L+H;
- Model: 467.5610.2;
- Type: 3 chambers reflection absorption;
- Location: on the left hand side of engine cowling, orizontal position;
- Height of outlet above ground: 370 mm.

TRANSMISSION

Clutch: utilized only for travelling of tractor

- Make: own make;
- Model: 470.22;
- Type: single disk dry clutch;
- Number of plates: 1;
- Plates diameter: 280 mm;
- Control system: hydraulically operated by pedal self readjusting.

Gear box

- Make: own make;
- Model: 470.22;
- Type: mechanical syncromesh speed change gear;
- Arrangement: four speeds forward, with three ranges of speed and one reverse group;
- Number of speeds.: 12 forward and 12 reverse;
- Available options: 16 forward and 16 reverse; (four speeds forward, with four ranges of speed and one reverse group).

Rear axle and final drives

- Make: own make;
- Model: 470.44;
- Type: bevel gear drive differential and epicyclic reduction gear final drives.

Differential lock

- Make: own make;
- Model: 470.68;
- Type: mechanical;
- Control system: engaged or disengaged by pedal.

Front axle and final drives

- Make: own make;
- Model: 470.44;
- Type: original S+L+H system with central shaft, bevel gear drive, differential and epicyclic reduction gear final drives;

Differential lock

- Make: own make;
- Model: 470.68.53;
- Type: mechanical;
- Control system: in common with rear differential lock control system.

Transmission lubrication

- Gear box, rear axle, final drives, power lift and hydraulic system (in common)
  . total capacity including filter: 28 dm^3;
  . change period: 2400 hrs;
  . filter change period: 2400 hrs;

- Front axle and final drives
  . total capacity: 4.1 dm^3;
  . change period: 1200 hrs;
- Recommended oil: see page 19.

Total ratios and speeds

Gear	Group	Number of engine revolutions for one revolution of the driving wheels	Nominal travelling speed at a rated engine speed of 2500 rev/min (*) (km/h)
	FORWARD		
1	S	611.44	0.90
2	S	373.05	1.49
3	S	269.75	2.06
1	N	203.81	2.72
4	S	173.98	3.19
2	N	124.35	4.47
3	N	89.91	6.18
1	F	67.93	8.18
4	N	57.99	9.58
2	F	41.45	13.41
3	F	29.97	18.55
4	F	19.33	28.76

(*) Calculated with a tyre dynamic radius index of 640 mm. (ISO 4251/1 - 1984).
- Number of revolutions of front wheels for one revolution of rear wheels: 1.460.

Total ratios and speeds

Gear	Group	Number of engine revolutions for one revolution of the driving wheels	Nominal travelling speed at a rated engine speed of 2500 rev/min (*) (km/h)
	REVERSE		
1	S	661.99	0.84
2	S	403.89	1.37
3	S	292.05	1.90
1	N	220.66	2.52
4	S	188.37	2.95
2	N	134.63	4.13
3	N	97.35	5.77
1	F	73.55	7.63
4	N	62.79	8.94
2	F	44.87	12.52
3	F	32.45	17.31
4	F	20.93	26.84

(*) Calculated with a tyre dynamic radius index of 640 mm. (ISO 4251/1 - 1984).
- Number of revolutions of front wheels for one revolution of rear wheels: 1.460.

POWER TAKE-OFF

Power take-off proportional to engine speed

- Type: independent, at rear of tractor, in tractor's median plane, engaged or disengaged by hand lever. Driven by multiplate wet clutch independent of travel clutch; ISO Standard 500-1979.
- Number of shafts: 1;
- Method of changing power take-off shaft ends and speeds: it is possible, through 6 screws, to mount one PTO shaft end at 6 or 21 splines. Speed selection by external hand lever;
- Location: at rear of tractor;
- Height above ground (with tyre size 14.9/28) : 630 mm;
- Distance from the median plane of the tractor: 0 mm;
- Distance behind rear axle .....: 390 mm;
- Direction of rotation (viewed facing driving end): clockwise.

1) 540 rev/min

- Dimensions: ISO Standard 500-1979, type 1 (35 mm, 6 splines);
- PTO speed at rated engine speed .....: 614 rev/min;
- Engine speed at standard power take-off speed: 2198 rev/min;
- Ratio of rotation speeds (engine speed/p.t.o. speed): 4.0714;
- Maximum power and torque transmissible: 89 kW and 1544.5 Nm.

2) 1000 rev/min

- Dimensions: ISO Standard 500-1979, type 2 (35 mm, 21 splines);
- PTO speed at rated engine speed .....: 1050 rev/min;
- Engine speed at standard power take-off speed: 2381 rev/min;
- Ratio of rotation speeds (engine speed/p.t.o. speed): 2.381;
- Maximum power and torque transmissible: 89 kW and 809 Nm.

Power take-off proportional to ground speed (optional)

- 540 rev/min;
- Travelling distance for one revolution of power take-off shaft: 350 mm;
- Number of power take-off shaft revolutions for one revolution of rear driving wheels: 10.42;
- Direction of rotation with forward gear engaged (viewed facing driving end): clockwise.

POWER LIFT

- Make: MITA;
- Model: M 65;
- Type: load sensing;
- Type of hydraulic system: open centre system;
- Type and number of cylinders: 1 internal hydraulic jacks at single effect;
- Type of lock for transport: mechanical, with screwed tie rods that lock the lower links;
- Relief valve pressure setting: 19 ± 1 MPa;
- Opening pressure of anti-shock valve: 20 MPa;
- Lift pump type: hydraulic rotary pump, driven by engine shaft;
- Transmission between pump and engine: mechanical;
- Type and number of filters: 1, replaceable paper cartridge;
- Changing: when the filter clogging warning lamp is lighted;
- Oil capacity: 28 dm^3 in common with gear-box;
- Site of oil reservoir: gear box;
- Position, type and No.of additional oil plugs: 6 ways distributor at rear of tractor;
- Maximum volume of oil available to external cylinders: 10 dm^3;
- Recommended oil: see page 19.

Three-point linkage

- Category: 2 in conformity with ISO 730/1-1977;
- Category adapter: none.

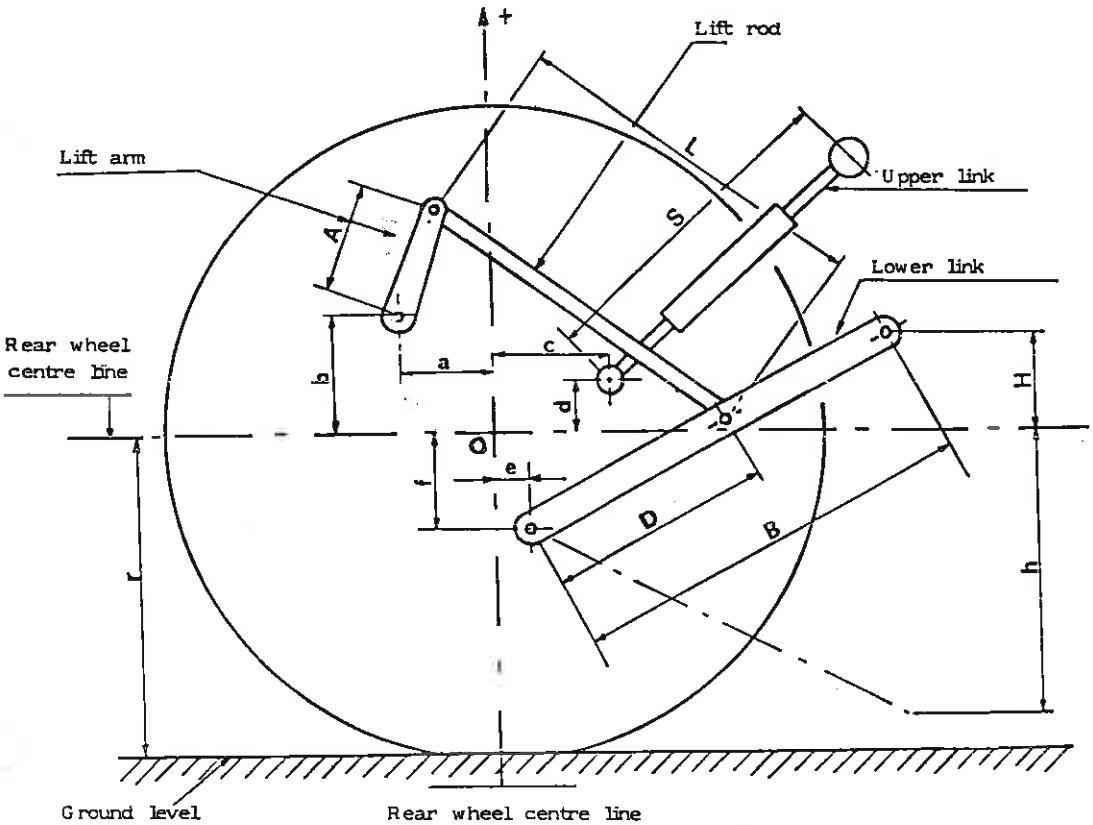
+
Lift rod
Lift arm
Upper link
Lower link
Rear wheel
centre line
L
S
A
a
b
c
d
e
f
O
D
B
H
h
r
Ground level
Rear wheel centre line

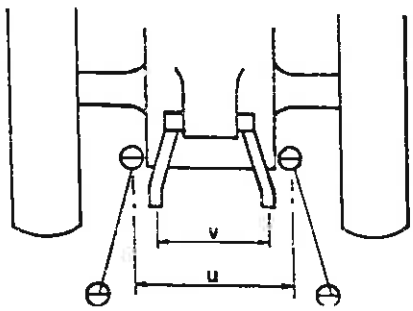
v
u

Dimensions of linkage geometry (when connected to the standard frame)

			Dimension or range (mm)	Settings used in test (mm)
Length of lifth arms		(A)	250	250
Length of lower links		(B)	750	750
Distance of lift arm pivot point from rear wheel axis (behind)	:horizontally	(a)	225	225
	:vertically	(b)	375	375
Horizontal distance between the 2 lower link points		(u)	425	425
Horizontal distance between the 2 lift arm end points		(v)	415	415
Length of upper link		(S)	from 445 to 700	450
Distance of upper link pivot point from rear wheel axis	:horizontally	(c)	450	450
	:vertically	(d)	310	310
Distance of lower link pivot point from rear wheel axis	:horizontally	(e)	156	156
	:vertically	(f)	113	113
Distance of lower link pivot point to lift rod pivot points on lower links		(D)	340	340
Length of lift rods		(L)	from 420 to 560	530
Height of lower hitch points relative to the rear wheel axis				
- in Low position		(h)	from 190 to 500	435
- in High position		(H)	from 105 to 415	170
Heigth above ground of lower hitch points when locked in transport position (*).				805

(*) Assuming the dynamic radius index = 640 mm (ISO 4251/1-1984)

SWINGING DRAWBAR: not fitted.

HOLED DRAWBAR: not fitted.

TRAILER HITCH

- Type: S+L+H;
- Hole diameter: 28.5 mm;
- Height above ground: 385-435-485-650 mm;
- Distance of hitch point from rear wheel axis, horizontally: 555 mm;
- Distance of hitch point from power take-off shaft end
  . vertically .: below 195-145-95 mm, above 70 mm;
  . horizontally: 160 mm;
- Maximum vertical permissible load: 14.7 kN.

STEERING

- Specifications: hydrostatic steering with BOSCH hydraulic gear pump HY/ZFS 11/14 R214, one ram at simple effect acting directly on front axle.
- Make: DANFOSS;
- Model: DYNAMIC OSPC 80 LS;
- Type: hydrostatic;
- Working pressure: 9 MPa;
- Oil capacity: 28 dm^3 in common with gear box;
- Oil change period: 2400 hrs;
- Filter change period: 2400 hrs;
- Recommended oil: see page 19.

BRAKES

Service brake

- Make: S+L+H;
- Model: 470.54;
- Type: oil immersed multiplate discs, 4 per side total 8 discs, mounted before each epicyclic reduction gea
  . disc diameter 178 mm, FRENDO HDT 303 lining material;
- Method of operation: mechanical activation with 2 pedals.
- Trailer braking take-off: none.

Parking brake

- Type: not independent, mechanical by tie rods connected to both service brakes;
- Method of operation: mechanically by hand lever.

Steering brake : divided pedal of service brake for normal use locked together.

STEERING WHEELS

- Number: 2;
- Location: at front;
- Tyres:
  . type: radial;
  . size: 9.5/20;
  . ply rating: 8;
  . maximum permissible load on each tyre: 956 daN;
  . corresponding inflation pressure: 280 kPa;
- Track widths: from 1070 to 1320 mm;
- Regulation: changing the position of the rims in respect of the disc.

DRIVING WHEELS

- Number: 2;
- Location: 2 at front and 2 at rear;
- Rear tyres:
  . type: radial;
  . size: 14.9/28;
  . ply rating: 6;
  . maximum permissible load on each tyre: 1579 daN;
  . corresponding inflation pressure: 140 kPa;
- Track widths: from 995 to 1320 mm;
- Regulation: changing the position of the rims in respect of the disc.

WHEELBASE: 2040 mm.

PROTECTIVE STRUCTURE

Specifications

- OECD approval number: not OECD tested.
- Make: S+L+H;
- Model: T50;
- Type: tiltable;
- Manufacturer's name: S+L+H S.p.A;
  . address: V.le Cassani, 15 - Treviglio (Bg); ITALY
- Protective device: frame tiltable.

Materials used in the construction and dimensions

See N.F.U. (France) Test Report n.6137 on Protec.Stuctures.

DRIVER'S SEAT

- Make: SABLE';
- Model: DS-83 H;
- Type: upholstered seat with back rest;
- Type of suspension: adjustable spring;
- Type of damping: shock absorber;
- Range of adjustment, longitudinal 150 mm;
  vertical .... 60 mm.

PASSENGER'S SEAT: NONE.

LIGHTING

Lighting system in accordance with E.E.C. 78/933

	Height above ground of centre with tyre(*) (mm)	Size (mm)	Distance from out side edge of trac tor to centre at 1060 mm track width (mm)
Headligths	735	110*110	737
Front park.lights	1350	110*35	377
Front finger post	1385	110*35	377
Rear park.lights	1290	50*60	432
Rear finger post	1290	50*60	482
Stop	1290	50*60	482
Reflectors	850	80 dia	432

(*) Tyre size: 9.5/20 front - 14.9/28 rear.

TEST CONDITIONS

Overall dimensions with tyres 9.5/20 front and 14.9/28 rear

	Length (mm)	Width (mm) min	Width (mm) max	(mm) at top of protec.struc.
Without ballast	3505	1395	1720	2080

Ground clearance (unballasted tractor): 250 mm;
Clearance-limiting part: front axle.

SAME FRUTTETO 75 DT "4WD" TEST no.042 page 18

Tractor mass (with tanks full, with farme, water in tyres none)

	Units	Front	Rear	Total
Without driver				
Without ballast	kg	960	1360	2320
With ballast	kg	1100	1360	2460
With driver				
Without ballast	kg	970	1425	2395
With ballast	kg	1110	1425	2535

Ballast

	no. of weights	total weight (kg)	water (kg)
front	3+1 *	140	-
rear	-	-	-
additional	-	-	-

*= front ballast mounting (20 kg)

Tyres and track width specifications	front	rear
- Tyres		
. dimensions	9.5/20	14.9/28
. ply rating	8	6
. type	radial	radial
. maximum load (tyre manufacturer's) daN	956	1579
. maximum load (tractor manufact.) daN	588	1373
. inflation pressure (tyre manufact.) kPa	280	140
. dynamic radius index mm	445(*)	640
- Chosen track width mm	1200	1060

* - In conformity with ETRTO norm.

Oils, lubrication and fuel
Capacity and change interval

	capacity dm³	oil change h	filter change h
Engine	9.2	150	300
Gear box	28	2400	2400
Front axle and final drives ...	4.1	1200	--
Rear axle and final drives	in common with gear box		
Hydraulic system	" " " " "		
Other (steering, etc.)	" " " " "		

Fuel and lubricants reccomended and used in tests
all in accordance with API NORM.

Fuel
- Type: AGIP DIESEL, DIN 51601
  (in accordance with the national standard);
- Specific gravity at 15 °C: 0.820 g/cm³.

Engine oil
- Type: AGIP DIESEL SIGMA S SAE 30;
- Viscosity: 12.5 cSt;
- Classification: API SE-CD.

Transmission oils
- Type: AGIP ROTRA THT;
- Viscosity: 11.5 cSt;
- Viscosity index: 95;
- Classification: API GL-3.

Hydraulic fluid
- Type: AGIP ROTRA THT;
- Viscosity: 11.5 cSt;
- Classification: API GL-3.

Steering oil
- Type: AGIP ROTRA THT;
- Viscosity: 11.5 cSt;
- Classification: API GL-3.

Grease
- Type: AGIP GREASE 30;
- Number of lubrication points: 11.

II - TEST RESULTS

A. COMPULSORY TESTS RESULTS

1) MAIN POWER TAKE-OFF PERFORMANCE

- Date and location of test: 12 may 1988 - I.S.M.A. TREVIGLIO (BG) ITALY
- Type of dynamometer: ZOELLNER 350 AC

Power	Speed		Fuel consumption			Specific
	Engine	P.T.O.	Hourly		Specific	Energy
kW	rev/min	rev/min	l/h	kg/h	g/kWh	kWh/l
MAXIMUM POWER - 2 HOUR TEST						
50.8	2509	1054	15.33	12.57	247	3.31
POWER AT RATED ENGINE SPEED						
50.8	2509	1054	15.33	12.57	247	3.31
STANDARD POWER TAKE-OFF SPEED (1000 ± 25 rev/min)						
50.7	2385	1002	15.13	12.41	244	3.35
PART LOADS						
i) The torque corresponding to maximum power at rated engine speed						
50.8	2509	1054	15.33	12.57	247	3.31
ii) 85% of torque obtained in i)						
43.8	2550	1071	13.61	11.16	255	3.22
iii) 75% of torque defined in ii)						
32.9	2559	1075	10.76	8.82	268	3.06
iv) 50% of torque defined in ii)						
21.9	2565	1077	8.30	6.81	311	2.64
v) 25% of torque defined in ii)						
10.9	2573	1081	6.07	4.98	458	1.80
vi) unloaded						
0	2623	1101	4.15	3.40	-	-

SAME FRUTTETO 75 DT "4WD" TEST no.042 page 21

PART LOADS AT STANDARD POWER TAKE-OFF SPEED (1000 rev/min)

Power	Speed		Fuel consumption			Specific
	Engine	P.T.O.	Hourly		Specific	Energy
kW	rev/min	rev/min	l/h	kg/h	g/kWh	kWh/l
i) The torque corresponding to maximum power available						
50.7	2385	1002	15.13	12.41	244	3.35
ii) 85% of torque obtained at maximum power						
43.8	2421	1017	13.21	10.83	247	3.32
iii) 75% of torque defined in ii)						
33.0	2437	1023	10.66	8.74	265	3.10
iv) 50% of torque defined in ii)						
21.5	**2447**	**1028**	**8.14**	**6.68**	**309**	2.64
v) 25% of torque defined in ii)						
11.2	2463	1034	6.16	5.05	449	1.82
vi) unloaded						
0	2521	1059	4.23	3.47	-	-

STANDARD SPECIFIC FUEL CONSUMPTION: 255/311/247/309 g/kWh

- No load maximum engine speed: 2623 rev/min
- Torque (1) at maximum power: 19.36 daNm
- Maximum torque (1) (engine speed: 1417 rev/min): 22.51 daNm
- Mean atmospheric conditions : Temperature .... 18°C
  Pressure ..... 99.0 kPa
  Relat.humidity . 73 %
- Maximum temperatures : Coolant ..... 98°C
  Engine oil ..... 130°C
  Fuel ..... 26°C
  Engine air intake ..... 24°C.

(1) The torque is the equivalent crankshaft torque.

P.T.O PERFORMANCE

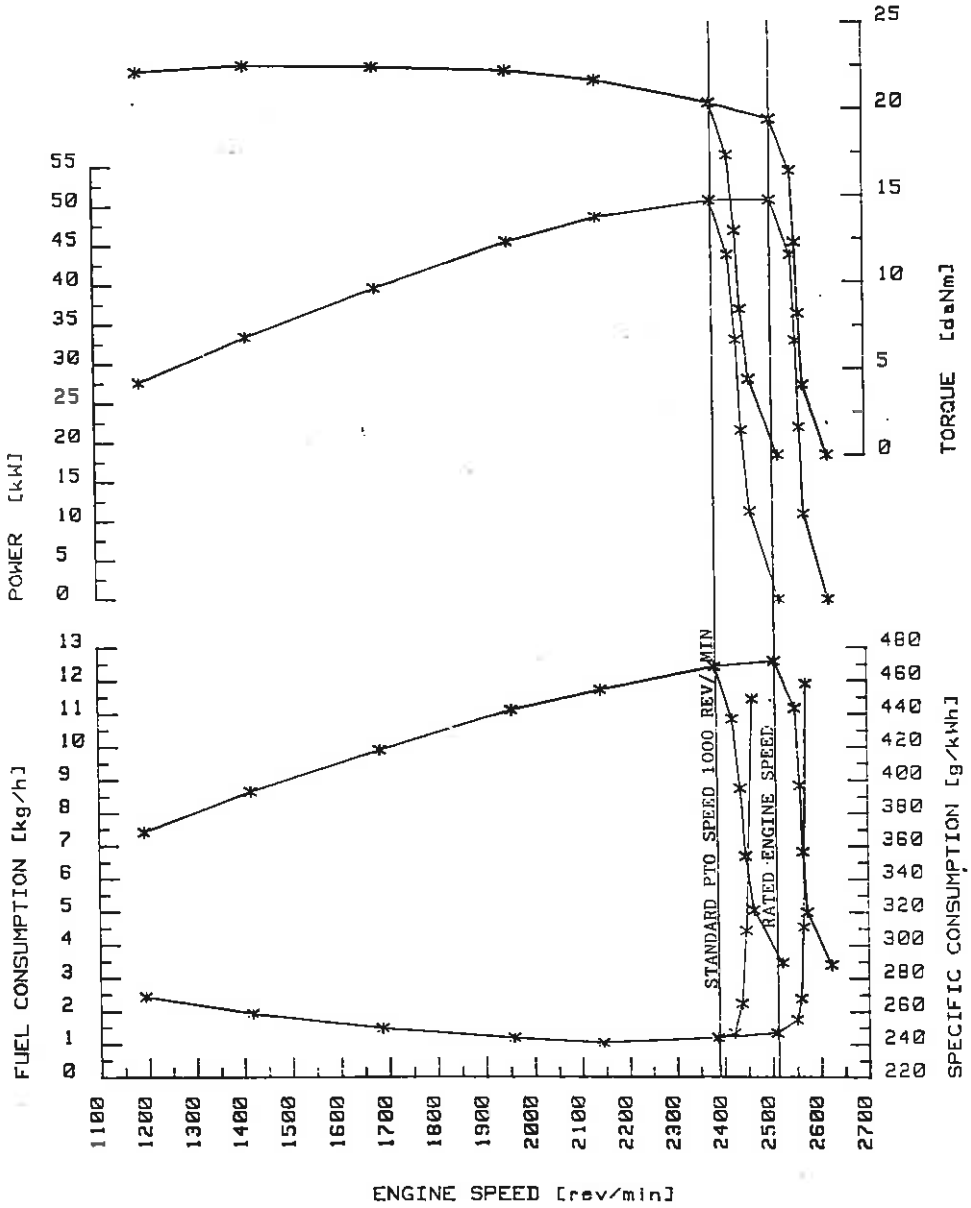

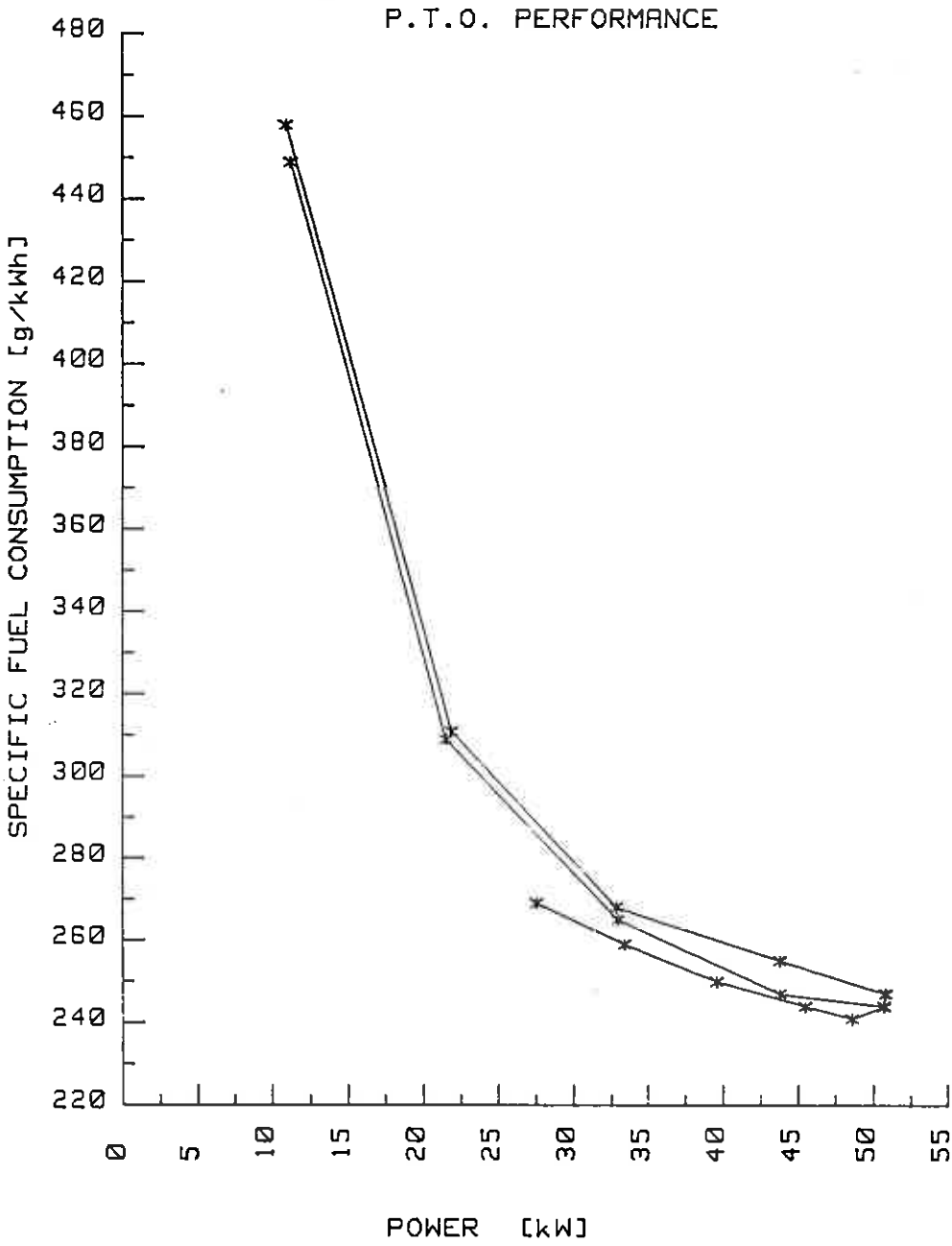
P.T.O. PERFORMANCE
SPECIFIC FUEL CONSUMPTION [g/kWh]
480
460
440
420
400
380
360
340
320
300
280
260
240
220
0
5
10
15
20
25
30
35
40
45
50
55
POWER [kW]

2) POWER LIFT AND HYDRAULIC POWER TEST

- Date and location of tests: 12.05.1988 - ISMA Treviglio (BG)

2.1) POWER LIFT

		at hitch point	on the frame
Height of lower hitch point above ground in down position	mm	200	200
Vertical movement	mm	600	605
Maximum corrected force exerted through full range	daN	1942	1569
Corresponding pressure of hydraulic fluid	MPa	18.0	18.0
Moment about rear axle	daNm	1759	2379
Maximum tilt angle of mast over range of lift	degrees	--	14

Lifting heights relative to the horizontal lower links

mm	-335	-300	-200	-100	0	100	200	265	270
Lifting forces at hitch points daN	1942	1956	2059	2157	2255	2349	2442	2422	---
Lifting forces at test frame daN	2177	2177	2059	1971	1937	1765	1618	---	1569

2.2) HYDRAULIC POWER TEST

Sustained pressure with relief valve open: 19.1 MPa;
Pump delivery rate at min pressure: 45.5 l/min;

Hydraulic power	kW	flow rate l/min	pressure MPa	oil temp. °C
At 90% of the actual relief valve setting	9.43	33	17.2	65
Maximum	10.66	43.5	14.7	61

.opening pressure of the relief valve: 18.1 MPa

Tapping point used for test : at rear of tractor;
Hydraulic fluid: see page 19.

3) DRAWBAR PERFORMANCE

- Date of tests: 18.05.1988
- Type of track: concrete
- Type and size of tyres front: 9.5/20 - 8 ply
  rear : 14.9/28 - 6 ply

Height of drawbar above ground: 475 mm.
Tyre inflation pressure : .front: 280 kPa .rear: 140 kPa

Gear	Power	Draw. pull	Speed	Eng. speed	Slip of wheel	Specific ener.cons.		Temperatures fuel	cool.	eng.	Atm. cond. temp.	hum.	pres.
	kW	daN	km/h	rev/min	%	kWh/l	g/kWh	°C	°C	°C	°C	%	kPa
3.1) MAXIMUM POWER IN TESTED GEARS (unballasted tractor)													
1S	4.01	1681	0.86	2610	15	0.83	985	24	51	87	17	80	99.7
2S	7.10	1839	1.39	2577	15	1.10	748	24	51	87	17	80	99.7
3S	9.90	1857	1.92	2572	15	1.40	585	24	52	89	17	80	99.7
1N	13.17	1867	2.54	2570	15	1.59	515	24	52	91	17	80	99.7
4S	15.40	1867	2.97	2569	15	1.78	460	24	52	91	17	80	99.7
2N	21.20	1844	4.14	2567	15	2.10	390	24	53	93	17	80	99.7
3N	27.45	1734	5.70	2559	15	2.24	365	25	53	95	18	80	99.7
1F	34.44	1556	7.97	2548	10	2.52	325	25	53	96	18	80	99.7
4N	42.94	1699	9.10	2500	9.5	2.79	294	25	53	100	18	79	99.7
2F	43.43	1182	13.23	2502	6.5	2.84	288	25	54	102	18	79	99.8
3F	40.74	799	18.36	2500	4	2.65	310	25	54	104	19	79	99.8

4) TRANSMISSION AND FUEL CONSUMPTION CHARACTERISTICS

Gear	Power	Draw. pull	Speed	Eng. speed	Slip of wheel	Specific ener.cons.		Temperatures fuel	cool.	eng.	Atm. cond. temp.	hum.	pres.
	kW	daN	km/h	rev/min	%	kWh/l	g/kWh	°C	°C	°C	°C	%	kPa
4.1) - Selected gear at maximum power:													
2F	43.43	1182	13.23	2502	6.5	2.84	288	25	54	102	18	79	99.8
4.1.1) - 75% of pull at maximum power at rated speed.													
2F	33.85	880	13.85	2540	4	2.45	335	26	54	102	19	79	99.7
4.1.2) - 50% of pull at maximum power at rated speed.													
2F	23.51	603	14.04	2562	2.5	2.16	380	26	54	100	19	79	99.7
4.1.3) - next higher gear giving the same pull as in 4.1.1, red. eng speed													
3F	34.07	884	13.88	1873	4.5	2.62	313	26	54	100	19	79	99.7
4.1.4) - next higher gear giving the same pull as in 4.1.2), red. eng.speed													
3F	23.56	598	14.19	1885	3	2.54	323	26	54	98	19	79	99.7

SAME FRUTTETO 75 DT "4WD" TEST no.042 page 27

Gear	Power	Draw. pull	Speed	Eng. speed	Slip of wheel	Specific ener.cons.		Temperatures fuel	cool.	eng.	Atm. cond. temp.	hum.	pres
	kW	daN	km/h	rev/min	%	kWh/l	g/kWh	°C	°C	°C	°C	%	kPa
4.2) - selected gear nearest to 7.5 km/h													
1F	34.44	1556	7.97	2548	10	2.52	325	25	53	96	18	80	99.7
4.2.1) - 75% of pull at maximum power at rated speed													
1F	26.80	1157	8.34	2555	5	2.31	379	26	54	98	19	79	99.7
4.2.2) - 50% of pull at maximum power at rated speed													
1F	18.23	766	8.57	2573	3	2.56	320	27	54	96	19	79	99.7
4.2.3) - next higher gear giving the same pull as in 4.2.1, red. eng. spee													
4N	26.68	1163	8.26	2160	5	2.46	333	27	54	96	19	79	99.7
4.2.4) - next higher gear giving the same pull as in 4.2.2, red. eng. spee													
4N	18.36	778	8.50	2182	3	3.04	269	27	54	97	19	79	99.7

REPAIRS AND REMARKS: none.

TEST CARRIED OUT BY
(P.a. Giovanni LAMORATTA)

THE DIRECTOR OF TESTING STATION
(Prof. Giuseppe COLZANI)

HEAD OF ISMA - ROMA
(Prof. Alfio CAMMILLI)

Text and graphics processed by: Ing. Giampaolo GIACOMETTI